THE EMBARCADERO
CLAY STREET
COMMERCIAL STREET
SACRAMENTO STREET
MARKET STREET
STEUART STREET
NEW PLANTING AREA
NEW MASONRY PAVING
NEW CONC. PAVING
NEW FOUNTAIN AND SCULPTURE SEE SHEETS 2,3,6, AND 7.
SURCHARGE AREA: 13,880 SQ. FT. APPROXIMATELY 6,000 CU. YDS TOP OF FILL + 13'-0"
2 Story Brick Bldg. Bsm't. Floor El. = -9.01 SEE NOTES: 1,2,3
2 Story Conc. Bldg. Bsm't. Floor El. = -10.01 SEE NOTES: 1,2,3
Exist'g Pavement SEE NOTES: 4,5
NEW CONC. PAVING Broken Conc. Slab Elev. = -10.01
NEW SEA WALL SEE SH. 2 TYPICAL
UNDERGROUND UTILITIES & SERVICES TO REMAIN SEE NOTE 6
S.44°51'51"E. 420.330'
N.44°51'51"W. 745.728'
S.9°05'21"E. 137.500'
S.44°51'51"E. 314.445'
LIMIT OF WORK
EXISTING 18" C.I.
N.4800
N.4,600

NOTE: PORTIONS OF MARKET AND STEUART STREETS WITHIN PROJECT LIMITS AND NEW CURB & GUTTER FOR SAME TO BE REBUILT BY OTHERS.
SEE PLAN A-32484 REDEVELOPMENT AREA E-1, STREETS CONTRACT "F" STEUART STREET VICINITY "FOR DRAINAGE WORK" ON STEUART STREET.

DEMOLITION PLAN

SCALE: 1" = 20'-0"

NOTES

1. BUILDING REMOVED BY OTHERS. N.I.C.
2. BASEMENT BACKFILLED BY OTHERS. CONFIRM EXTENT AND/OR OMISSIONS AT THE SITE.
3. ALL EXISTING FOOTINGS SHALL BE REMOVED TO A DEPTH OF 30" MIN. BELOW NEW FOOTINGS, AS SPECIFIED.
4. ALL EXISTING PAVING, SLABS, CURBS, AND WALKS ON THE SITE SHALL BE REMOVED, AS SPECIFIED.
5. ALL UTILITIES AND SERVICES BETWEEN ARROWS ARE TO BE ABANDONED, EXCEPT AS OTHERWISE INDICATED: CONFIRM WITH PROPER UTILITY OR COMPANY THAT EACH LINE IS INACTIVE BEFORE CUTTING OR BLOCKING. PLUG AND/OR FILL ALL ABANDONED MANHOLES, ELEVATOR ENTRIES, ETC.
6. ADJUST MANHOLE RIM OR C.B. GRATE TO NEW PAVEMENT OR GRADE ELEVATION, OR AS OTHERWISE INDICATED.
7. RELOCATE OR ADJUST MANHOLE OR C.B. AS INDICATED OR AS REQUIRED BY NEW CURB OR OTHER CONSTRUCTION.
8. PLUG AND FILL (MANHOLE, CATCH BASIN, ETC.) BUT LINE(S) SERVING SAME IS TO REMAIN IN SERVICE.
9. INFORMATION TAKEN FROM "BOUNDARY & TOPOGRAPHIC SURVEY" OF PROPOSED FERRY BLDG. PARK FOR SAN FRANCISCO REDEVELOPMENT AGENCY, DATED MAY, 1966 BY KIRKER, CHAPMAN, & ASSOCIATES, CONSULTING CIVIL ENGINEERS.
10. FOR NEW GRADE ELEVATIONS, SEE SHEET 3.
11. BASIS OF ELEVATIONS - CITY OF SAN FRANCISCO DATUM.
12. VERIFY ALL CONDITIONS & DIMENSIONS AT THE SITE.
13. FOR PROJECT BOUNDARIES, SEE SH. 2.
14. THE ABANDONMENT OF EXISTING DRAINAGE FACILITIES SHOWN TO BE ABANDONED SHALL BE DONE IN ACCORDANCE WITH THE APPLICABLE REQUIREMENTS OF SECTION 303 OF THE SAN FRANCISCO BUREAU OF ENGINEERING STANDARD SPECIFICATIONS, 1965.
15. ABANDONMENT OF THE SANITARY SEWER IN SACRAMENTO STREET BASED ON PREMISE THAT NO SANITARY FACILITIES ARE REQUIRED FOR THE EMBARCADERO PLAZA IN THIS AREA.
16. IN ADDITION TO THE WORK WITHIN TO PROJECT BOUNDARY, THE FOLLOWING WORK OUTSIDE THE PROJECT BOUNDARY SHALL BE INCLUDED IN THE PROJECT SCOPE (ALT. A), SHOWN ON THIS SHEET:
    1. NEW CATCHBASINS, & ABANDONING OF CULVERTS
    2. NEW VCP CONNECTIONS
    3. NEW PAVING & REMOVAL OF CURB

LEGEND

●	STOP LIGHT
△	STREET SIGN
△	PARKING SIGN
▲	PARKING METER
▲	WAIT WALK SIGN
□	TRAFFIC CONTROL BOX
☒	FIRE ALARM BOX
□	TROLLEY POLE
⊘	ELECTROLIER
⊠	TROLLEY POLE & ELECTROLIER
◎	POWER POLE & ELECTROLIER
◎	ELECTROLIER W/ OCTAGON BASE
▭	POLICE TELEPHONE
•	FUEL INLET
○	GAS VALVE
⊗	WATER VALVE
▬	WATER METER
♉	LOW PRESSURE FIRE HYDRANT
♉	HIGH PRESSURE FIRE HYDRANT
⊞	SEWER VENT
P.L.	PROPERTY LINE
⊡	SET HUB
⊙	SET LEAD PLUG W/TAG MARKED R.C.E. 12081
+	SET CUT
⁘	SET FIVE NAILS
▨	CONCRETE
⊏	APPROX. LIMITS OF BASEMENTS
——	LIMITS OF BASE BID, EXCEPT AS NOTED OTHERWISE. SEE SPECIFICATIONS.
— — —	APPROX. LIMITS ALTERNATE "A". SEE SPEC.
- - - -	LIMIT AREA AVAIL. TO SLOPE FILL FROM NEW GRADE TO EXISTING.
0.00	EXISTING GRADE ELEVATIONS
0.0	NEW GRADE ELEVATIONS
⊕	INSTALL NEW FRAME AND COVER ON EXISTING MANHOLE (PLAN A-10,634)
◓	NEW CATCHBASIN (PLAN LL-18,039 CH.6)
AB	ABANDON EXISTING SEWERS & RELATED FACILITIES BY FILLING WITH SLURRY

EMBARCADERO PLAZA
EMBARCADERO LOWER MARKET APPROVED REDEVELOPMENT PROJECT AREA E1

DEMOLITION PLAN

SAN FRANCISCO REDEVELOPMENT AGENCY IN COOPERATION
WITH THE SAN FRANCISCO RECREATION AND PARK DEPARTMENT
AND SAN FRANCISCO DEPARTMENT OF PUBLIC WORKS

JOINT VENTURE ARCHITECTS: Lawrence Halprin
LAWRENCE HALPRIN & ASSOCIATES
JOHN S. BOLLES ASSOCIATES
MARIO J. CIAMPI & ASSOCIATES Mario J. Ciampi

SCALE: 1" = 20'-0"
DATE: JAN. 25, 1969
DRAWN BY: D.P. W.H.

1

SHEET 1 OF 12

11-18-63

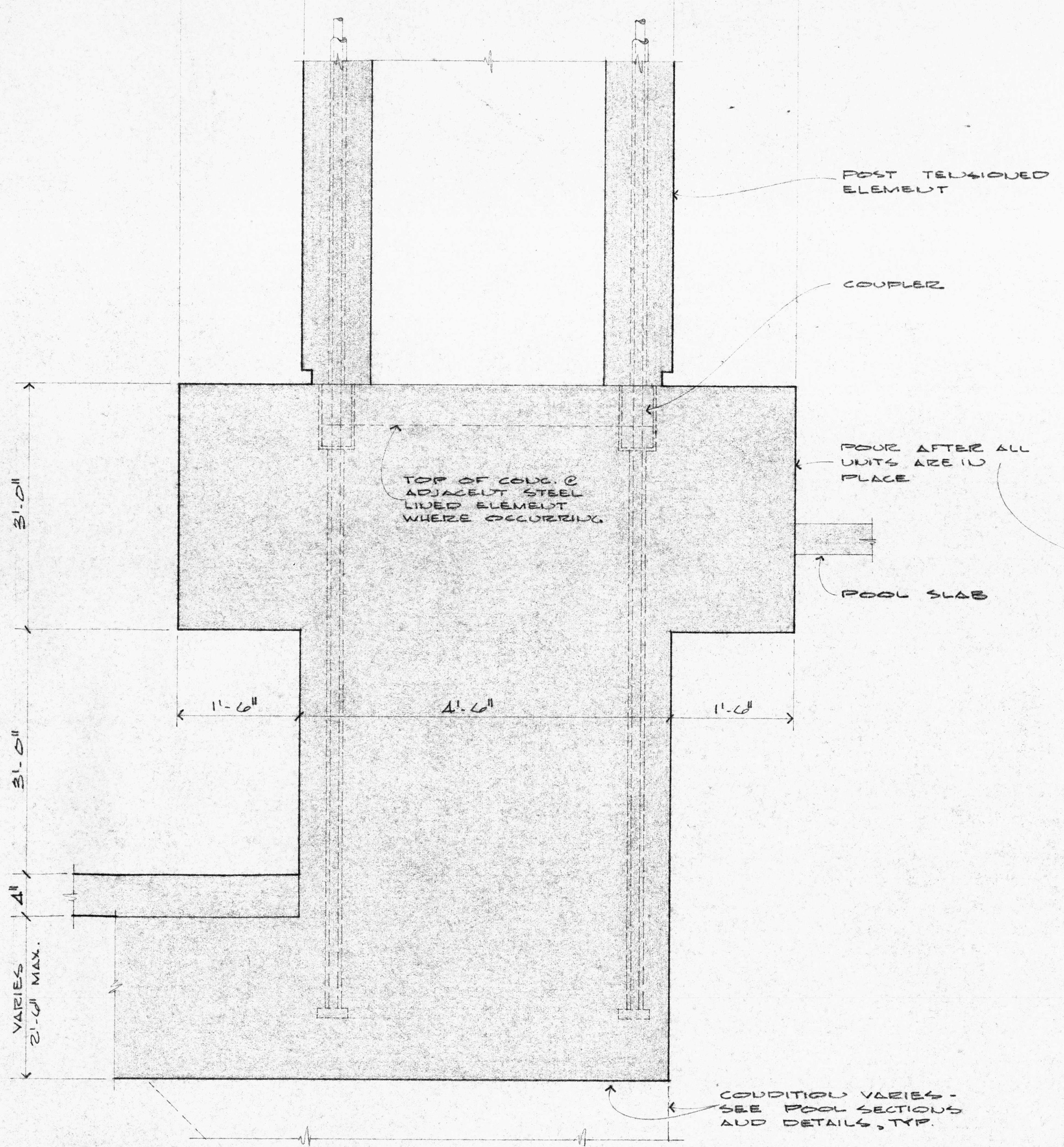
1'-6"
4'-6"
1'-6"
POST TENSIONED ELEMENT
COUPLER
TOP OF CONC. @ ADJACENT STEEL LINED ELEMENT WHERE OCCURRING.
POUR AFTER ALL UNITS ARE IN PLACE
POOL SLAB
3'-0"
3'-0"
4"
VARIES 2'-6" MAX.
CONDITION VARIES - SEE POOL SECTIONS AND DETAILS, TYP.

1/S-8 BASE CONNECTION - POST TENSIONED ELEMENT
1" = 1' - 0"

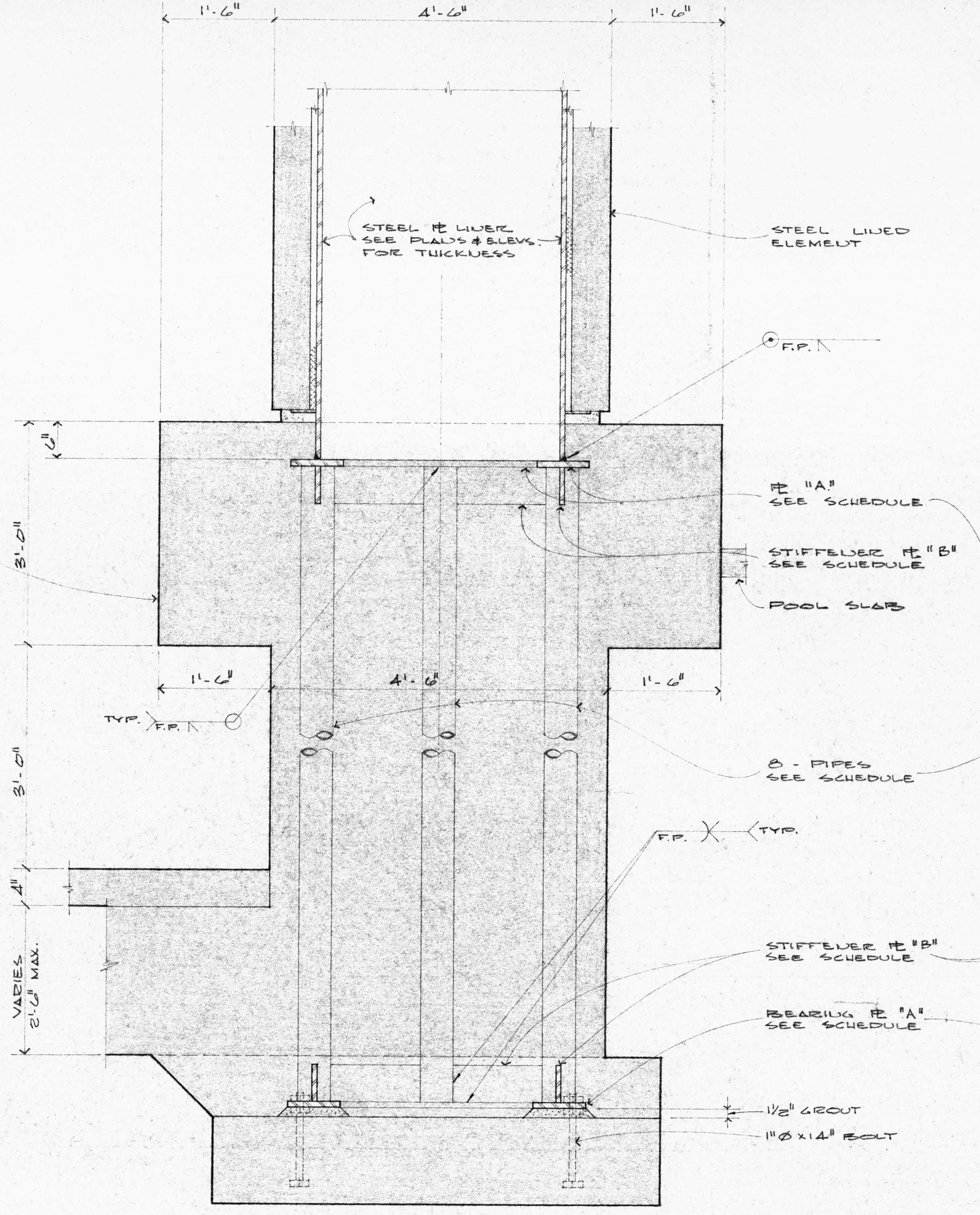
1'-6"
4'-6"
1'-6"
STEEL PL LINER SEE PLANS & ELEVS. FOR THICKNESS
STEEL LINED ELEMENT
F.P.
6"
3'-0"
3'-0"
4"
VARIES 2'-6" MAX.
PL "A" SEE SCHEDULE
STIFFENER PL "B" SEE SCHEDULE
POOL SLAB
TYP. F.P.
8 - PIPES SEE SCHEDULE
F.P. TYP.
STIFFENER PL "B" SEE SCHEDULE
BEARING PL "A" SEE SCHEDULE
1½" GROUT
1"Φ x 14" BOLT

2/S-8 BASE CONNECTION - STEEL LINED "E" ELEMENTS
1" = 1' - 0"

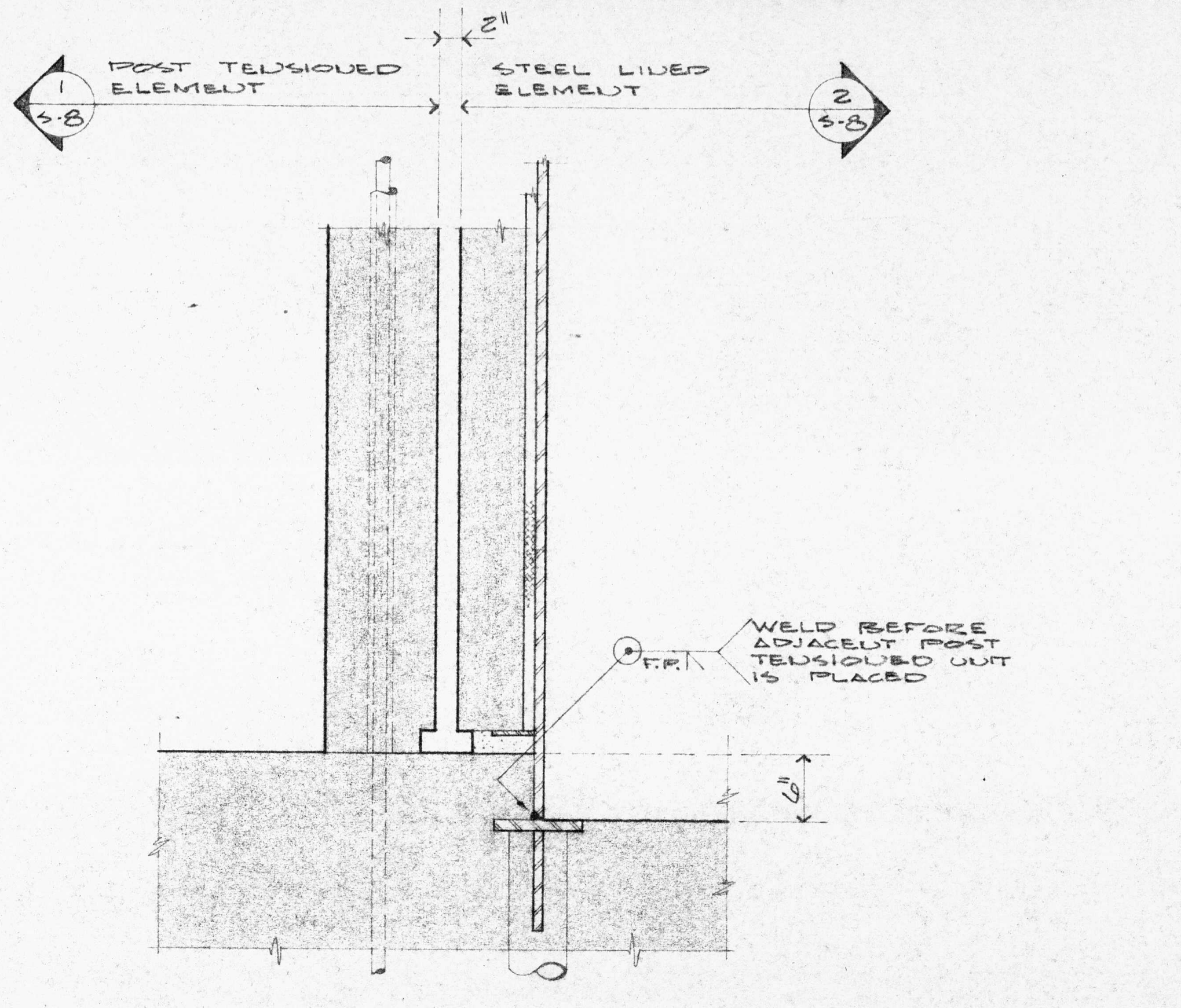
2"
1/S-8 POST TENSIONED ELEMENT
STEEL LINED ELEMENT 2/S-8
WELD BEFORE ADJACENT POST TENSIONED UNIT IS PLACED
F.P.
6"

3/S-8 SECTION
1" = 1' - 0"

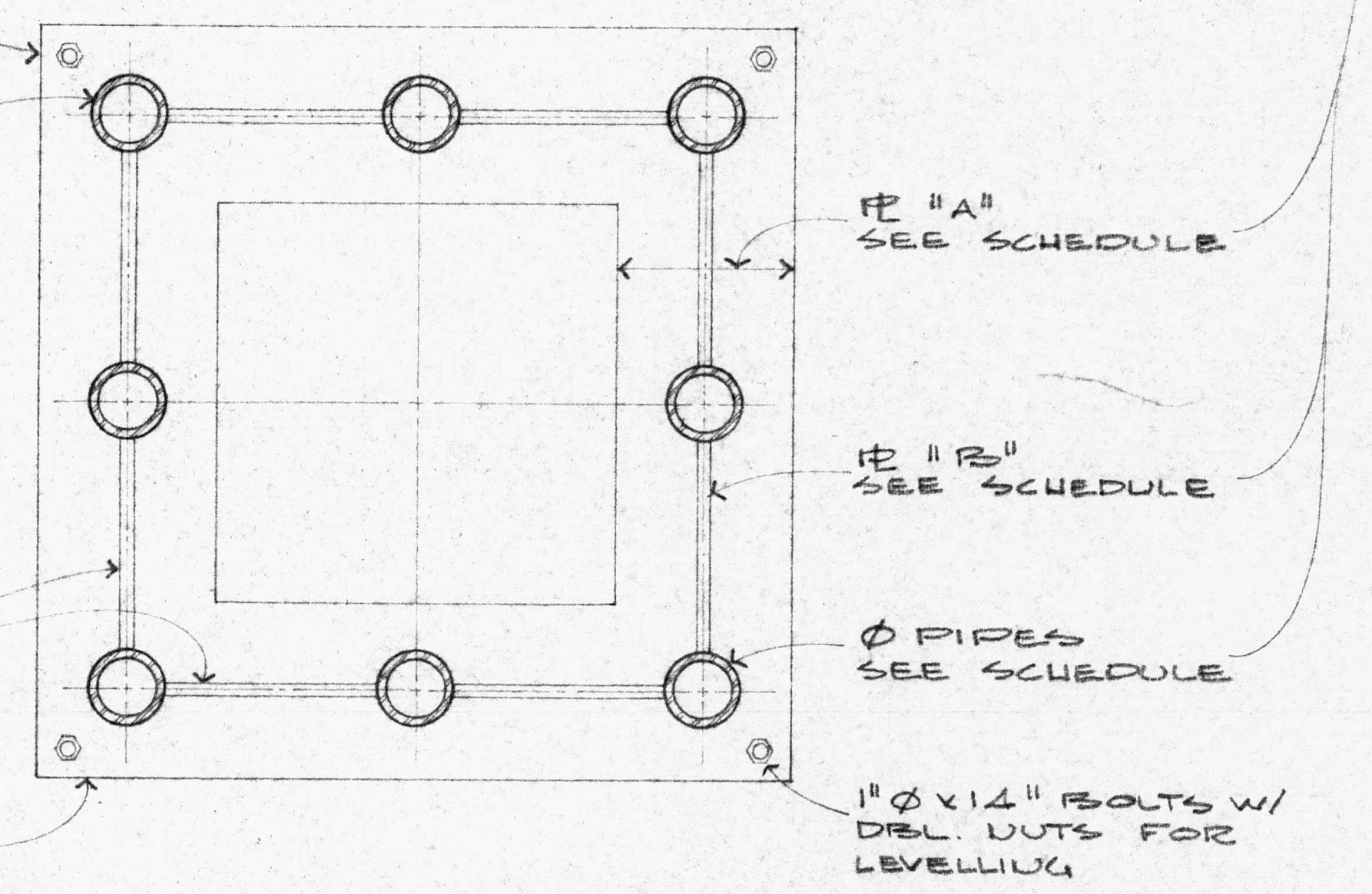
PL "A" SEE SCHEDULE
PL "B" SEE SCHEDULE
Φ PIPES SEE SCHEDULE
1"Φ x 14" BOLTS W/ DBL. NUTS FOR LEVELLING

PLAN - PIPE RACK

STRUCTURE	Φ PIPE	PL "A"	PL "B"
NL	8-5"Φ XX STRONG.	9½" x 1¾"	8" x ¾"
EC	"	"	"
NC (1 & 13)	8-4"Φ XX STRONG.	8½" x 1½"	"
EF	8-5"Φ X STRONG.	6" x 1⅛"	6" x ¾"
EJ (1 & 12)	"	"	"
EO (1 & 10)	"	"	"
PA	8 - 4"Φ STD	3½" x ¾"	4" x ⅝"

6/S-8 PIPE RACK SCHEDULE

UNIT	PL SIZE	NUMBER & SIZE 60 KSI BARS (EACH FACE)	FLAT BARS (EACH FACE)
NL-5	5" x 1"	7-#9	4-1" x 1½"
NC-5	5" x 1"	7-#9	4-1" x 1½"
NC-8		4-#5	4-1" x 1½"
EC-4 (BOTH ENDS)	7" x 1"	9-#9 x 5'-0"	4-1" x 1½" x 8"
EC-6 & 7	5 x ½"	6-#5 x 3'-0"	3-1" x 1¼" x 5"
EF-4 & 7	5 x ¾"	8-#6 x 3'-6"	3-1" x 1" x 5"
EJ-3	7 x ⅞"	6-#9	4-1" x 1½" x 8"
EJ-6	5" x ¾"	6-#8 x 4'-6"	4-1" x 1½" x 5"
EJ-8	5" x ½"	6-#5	3-1" x 1" x 5"
EO-5	5" x ⅞"	5-#9	4-1" x 1½" x 5"
EO-8		4-#5	3-1" x 1" x 5"
PA-4	5" x ½"	6-#5	3-1" x 1" x 5"
NK-2 & 4	7" x ¾"	8-#6	4-1" x 1½" x 8"

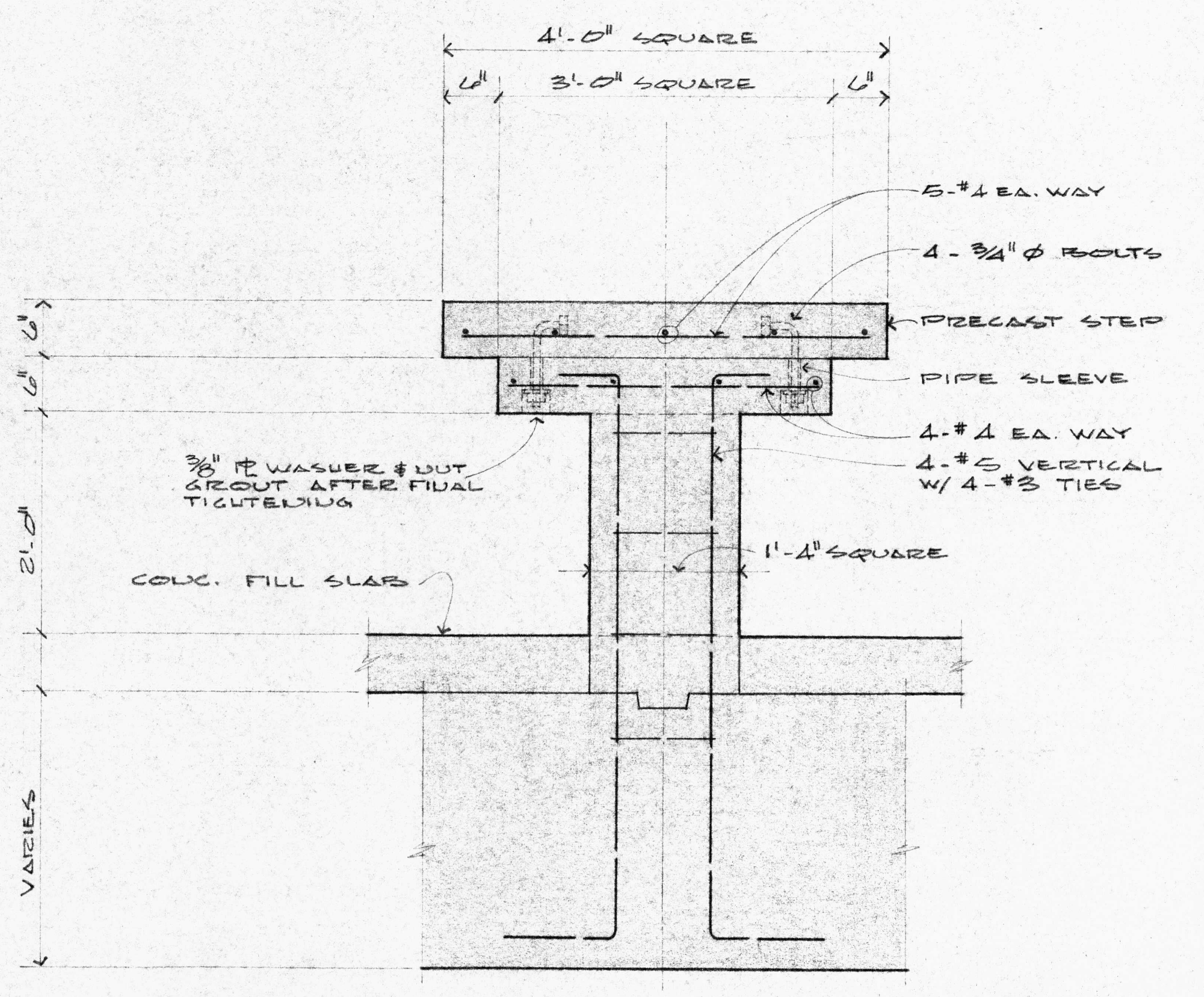
4'-0" SQUARE
6"
3'-0" SQUARE
6"
5-#4 EA. WAY
4 - ¾"Φ BOLTS
PRECAST STEP
PIPE SLEEVE
4-#4 EA. WAY
4-#5 VERTICAL W/ 4-#3 TIES
⅜" PL WASHER & NUT GROUT AFTER FINAL TIGHTENING
1'-4" SQUARE
CONC. FILL SLAB
6"
6"
2'-0"
VARIES

4/S-8 PRECAST CONCRETE PEDESTAL
1" = 1' - 0"

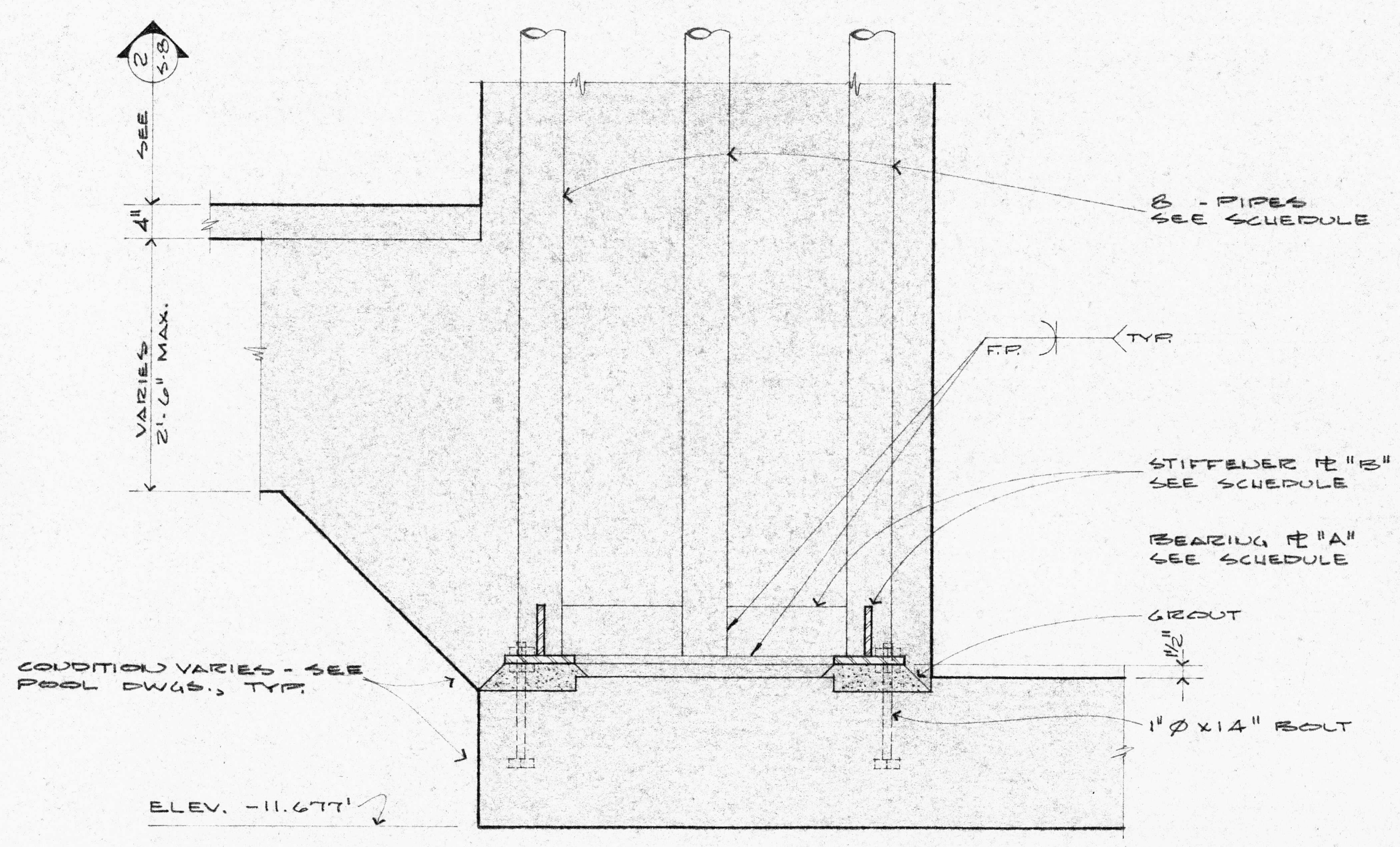
2/S-8
SEE
4"
VARIES 2'-6" MAX.
8 - PIPES SEE SCHEDULE
F.P. TYP.
STIFFENER PL "B" SEE SCHEDULE
BEARING PL "A" SEE SCHEDULE
GROUT
1½"
1"Φ x 14" BOLT
CONDITION VARIES - SEE POOL DWGS., TYP.
ELEV. -11.677'

5/S-8 BASE CONNECTION - STEEL LINED "N" ELEMENTS
1" = 1' - 0"

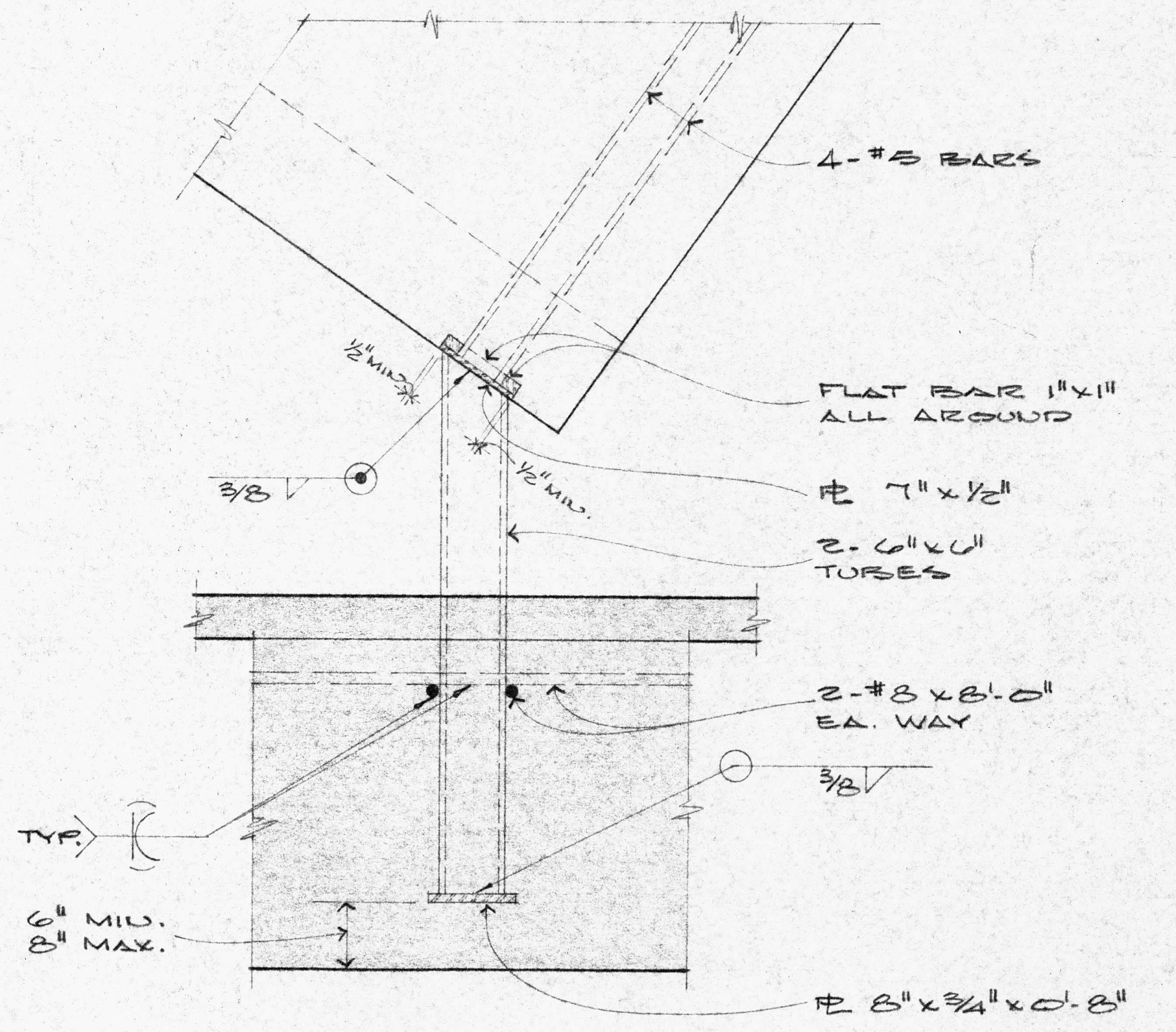
4-#5 BARS
½" MIN.
½" MIN.
FLAT BAR 1" x 1" ALL AROUND
3/8
PL 7" x ½"
2- 6" x 6" TUBES
2-#8 x 8'-0" EA. WAY
3/8
TYP.
6" MIN. 8" MAX.
PL 8" x ¾" x 0'-8"

7/S-8 SUPPORT TUBE DET.
1" = 1' - 0"

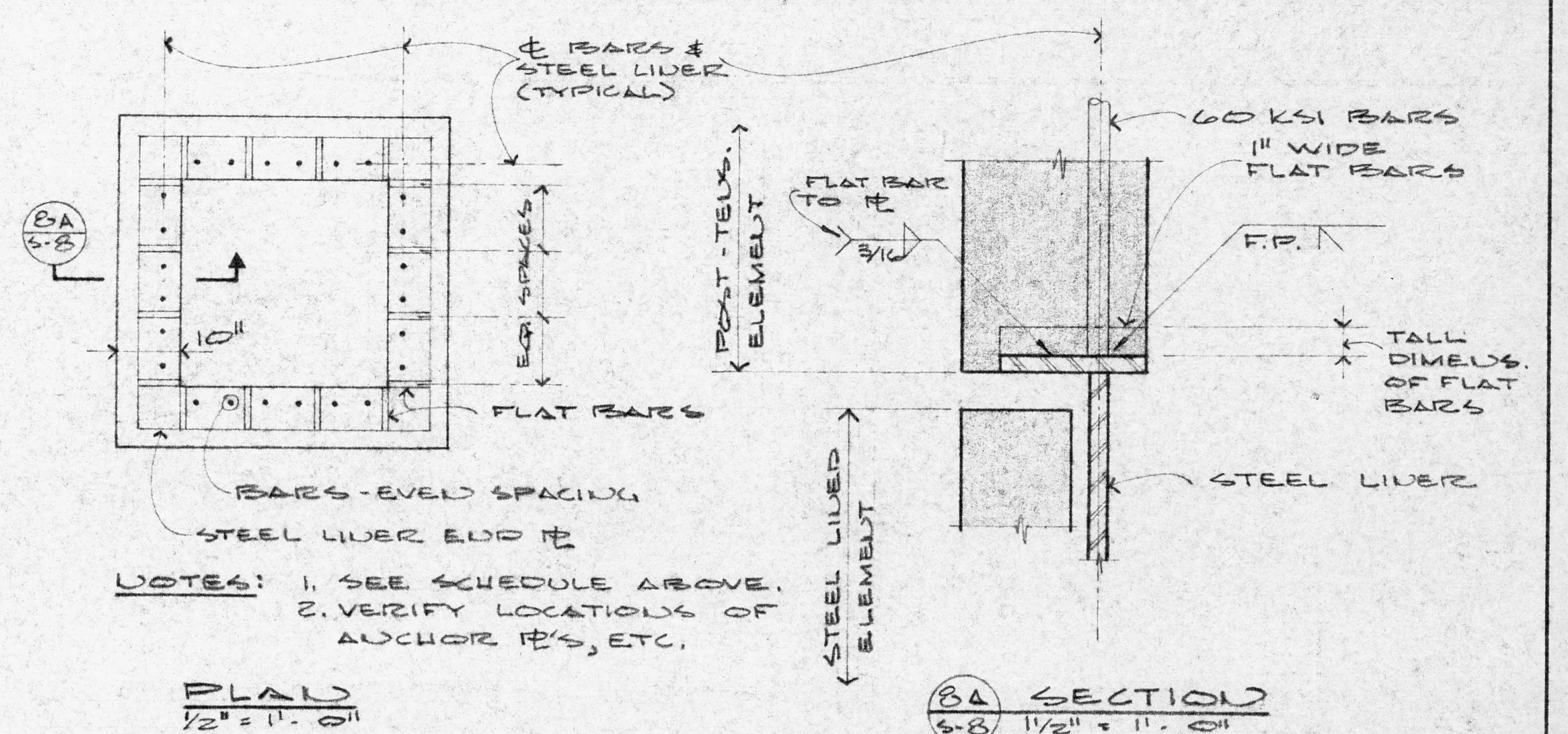
CL BARS & STEEL LINER (TYPICAL)
8A/S-8
10"
EQ. SPACES
FLAT BARS
BARS - EVEN SPACING
STEEL LINER END PL
POST - TENS. ELEMENT
STEEL LINED ELEMENT
FLAT BAR TO PL
3/16
60 KSI BARS
1" WIDE FLAT BARS
F.P.
TALL DIMENS. OF FLAT BARS
STEEL LINER

NOTES:
1. SEE SCHEDULE ABOVE.
2. VERIFY LOCATIONS OF ANCHOR PL'S, ETC.

PLAN
½" = 1'-0"

8A/S-8 SECTION
1½" = 1'-0"

8/S-8 STEEL LINER END PL SCHEDULE & DETAILS

G F D S   E N G I N E E R S
CIVIL & STRUCTURAL ENGINEERS
1620 MONTGOMERY ST., SAN FRANCISCO, CALIFORNIA

S1057

EMBARCADERO PLAZA
EMBARCADERO LOWER MARKET APPROVED REDEVELOPMENT PROJECT AREA E1

SCULPTURE
BASE, FOUNDATIONS, SECTIONS & DETAILS

SAN FRANCISCO REDEVELOPMENT AGENCY IN COOPERATION
WITH THE SAN FRANCISCO RECREATION AND PARK DEPARTMENT
AND SAN FRANCISCO DEPARTMENT OF PUBLIC WORKS

JOINT VENTURE ARCHITECTS:
LAWRENCE HALPRIN & ASSOCIATES
JOHN S. BOLLES ASSOCIATES
MARIO J. CIAMPI & ASSOCIATES

SCALE: as noted
DATE: JAN. 25, 1969
DRAWN BY: jmo

S8

SHEET S8 OF 8

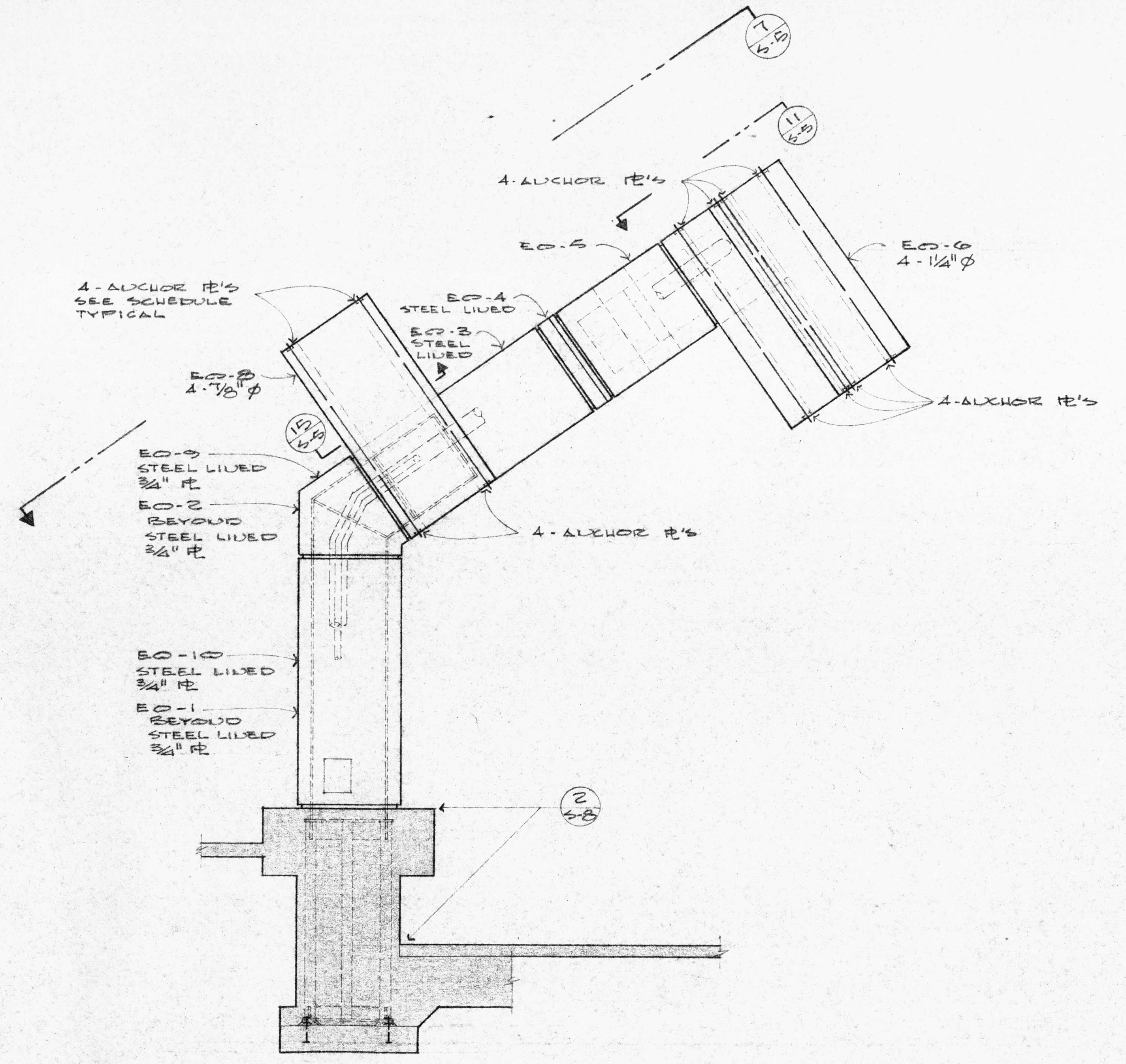

4-ANCHOR PL'S
EO-5
EO-6
4-1 1/4"Ø
4-ANCHOR PL'S SEE SCHEDULE TYPICAL
EO-4 STEEL LINED
EO-3 STEEL LINED
EO-8 4-7/8"Ø
4-ANCHOR PL'S
EO-9 STEEL LINED
EO-2 BEYOND STEEL LINED 3/4" PL
4-ANCHOR PL'S
EO-10 STEEL LINED
EO-1 BEYOND STEEL LINED 3/4" PL

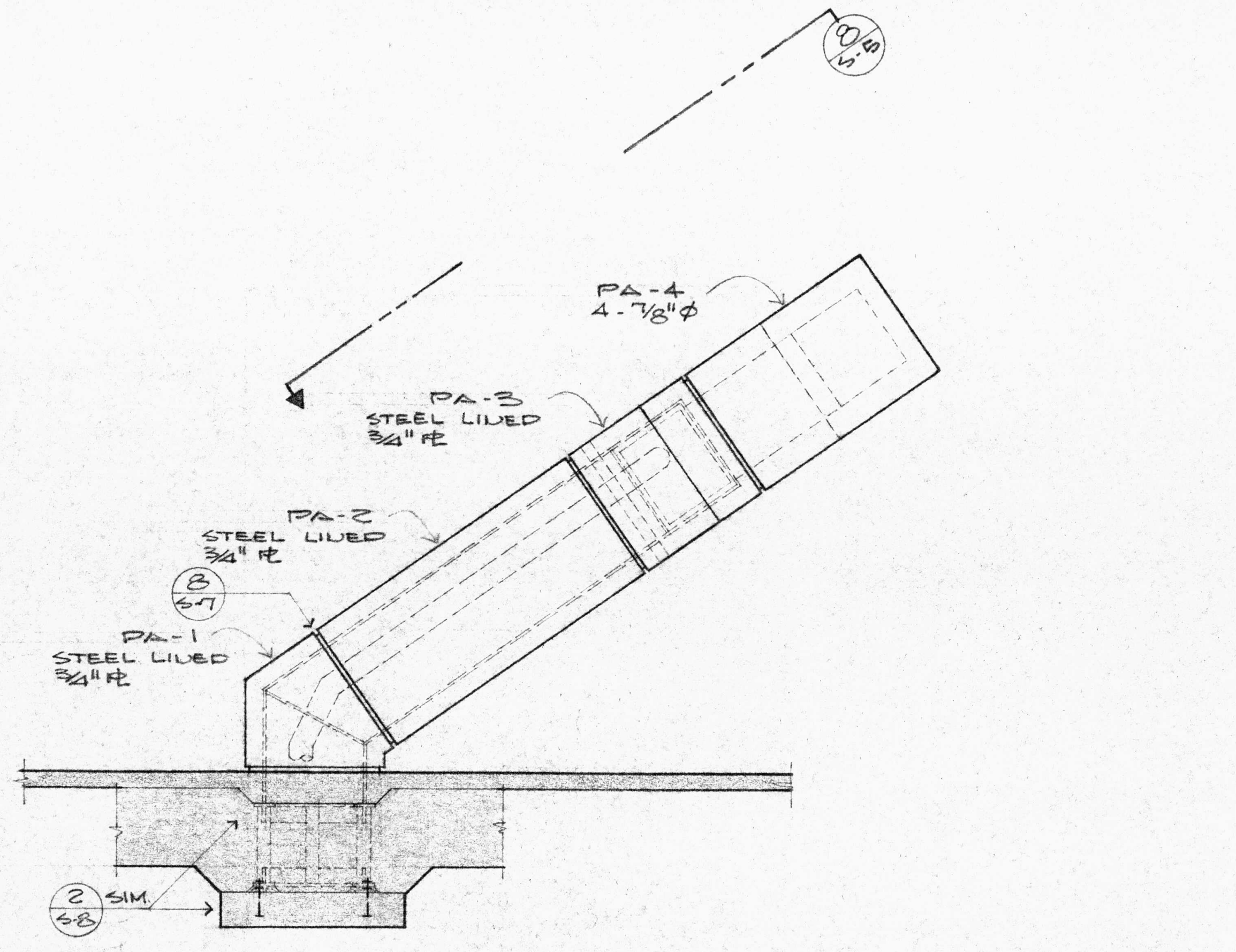

PA-4
4-7/8"Ø
PA-3 STEEL LINED 3/4" PL
PA-2 STEEL LINED 3/4" PL
PA-1 STEEL LINED 3/4" PL
2 SIM.

2 S-6 STRUCTURE PA - ELEVATION
1/4" = 1' - 0"

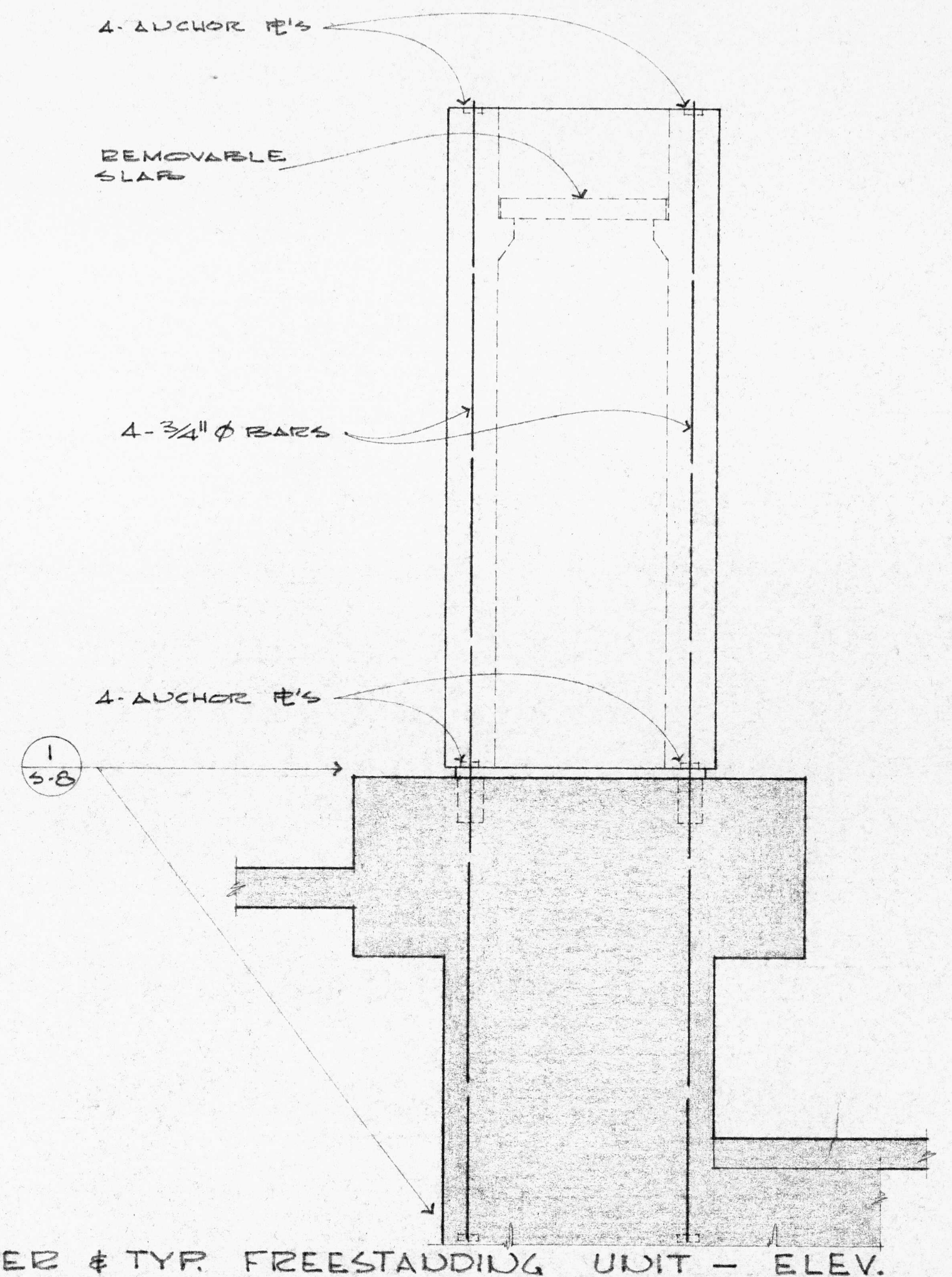

4-ANCHOR PL'S
REMOVABLE SLAB
4-3/4"Ø BARS
4-ANCHOR PL'S

3 S-5 CORNER & TYP. FREESTANDING UNIT - ELEV.
1/2" = 1' - 0"

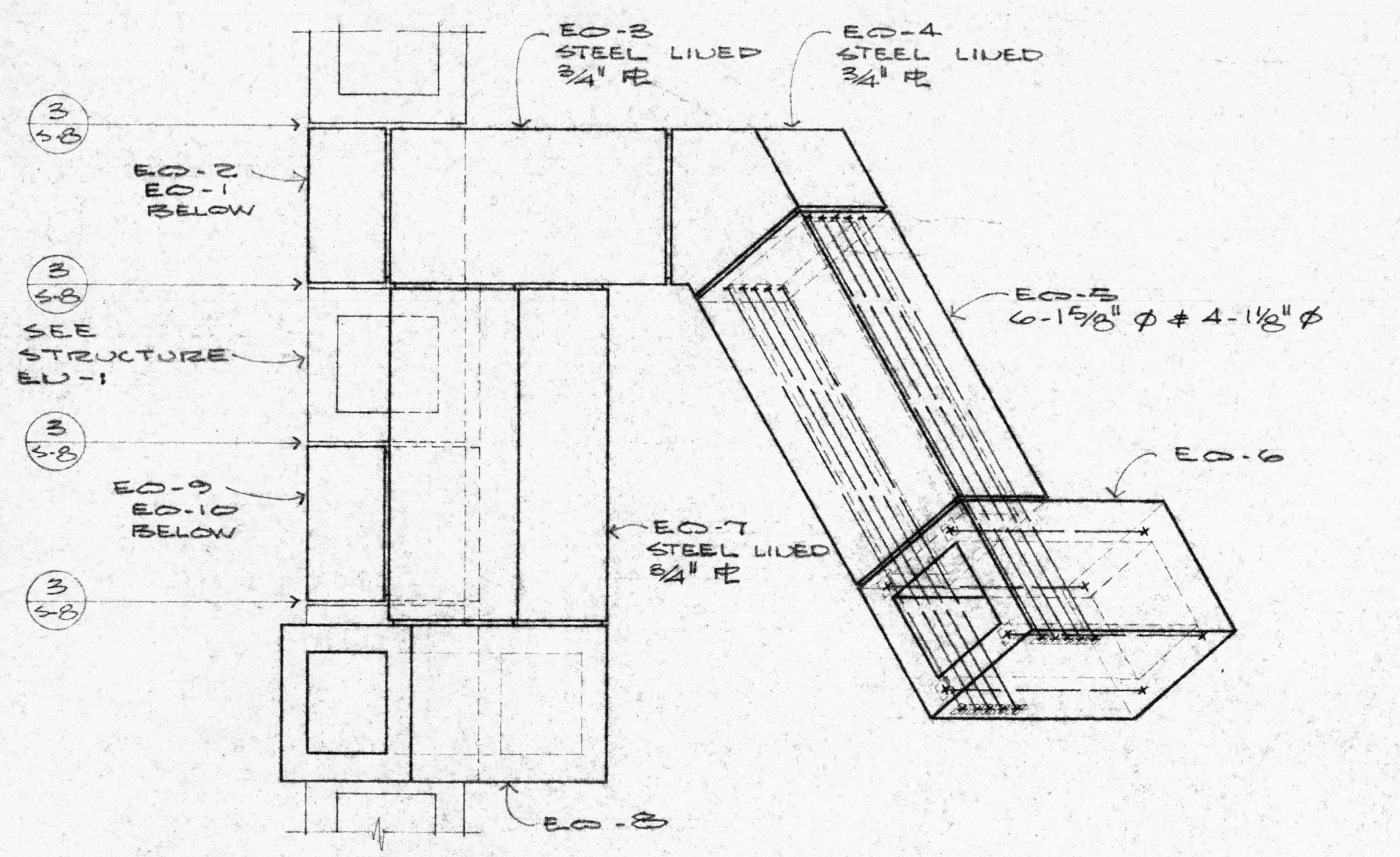

EO-3 STEEL LINED 3/4" PL
EO-4 STEEL LINED 3/4" PL
EO-2 EO-1 BELOW
SEE STRUCTURE EN-1
EO-5 6-1 3/8"Ø & 4-1 1/8"Ø
EO-6
EO-9 EO-10 BELOW
EO-7 STEEL LINED 3/4" PL
EO-8

4 S-5 STRUCTURE EO - PLAN
1/4" = 1' - 0"

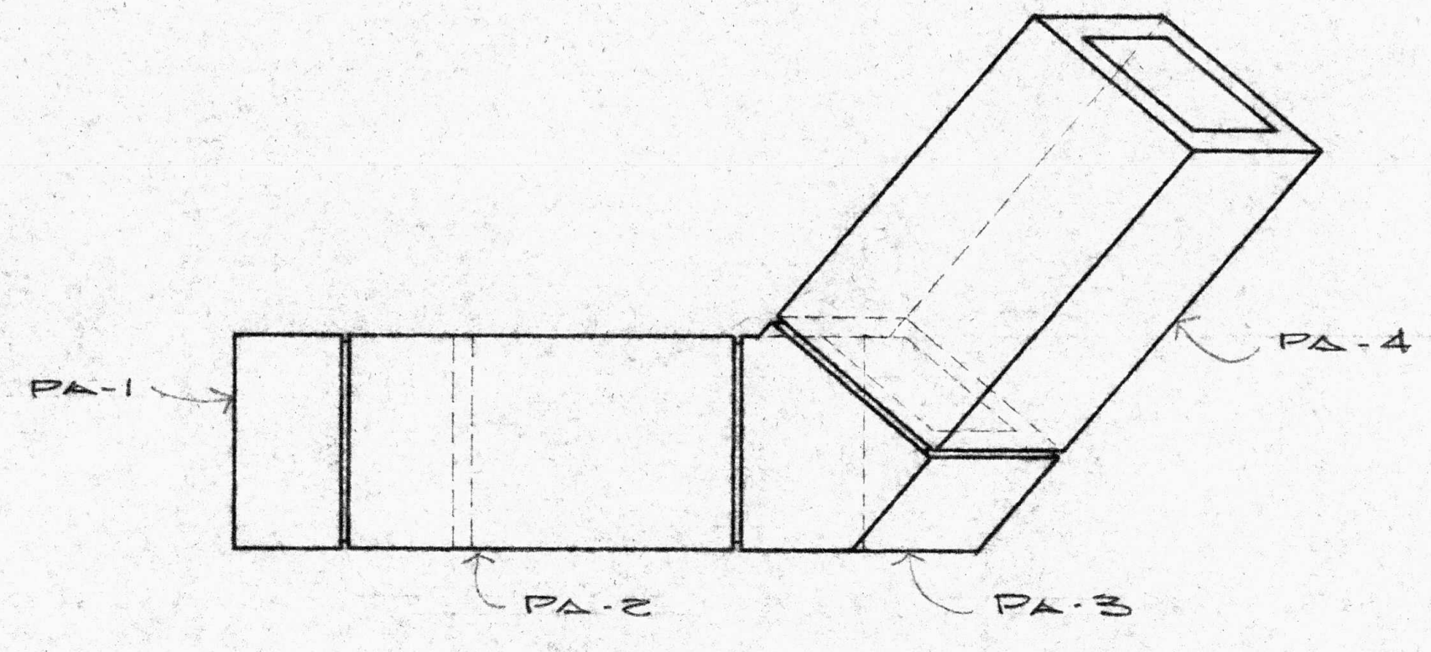

PA-1
PA-2
PA-3
PA-4

5 S-5 STRUCTURE PA - PLAN
1/4" = 1' - 0"

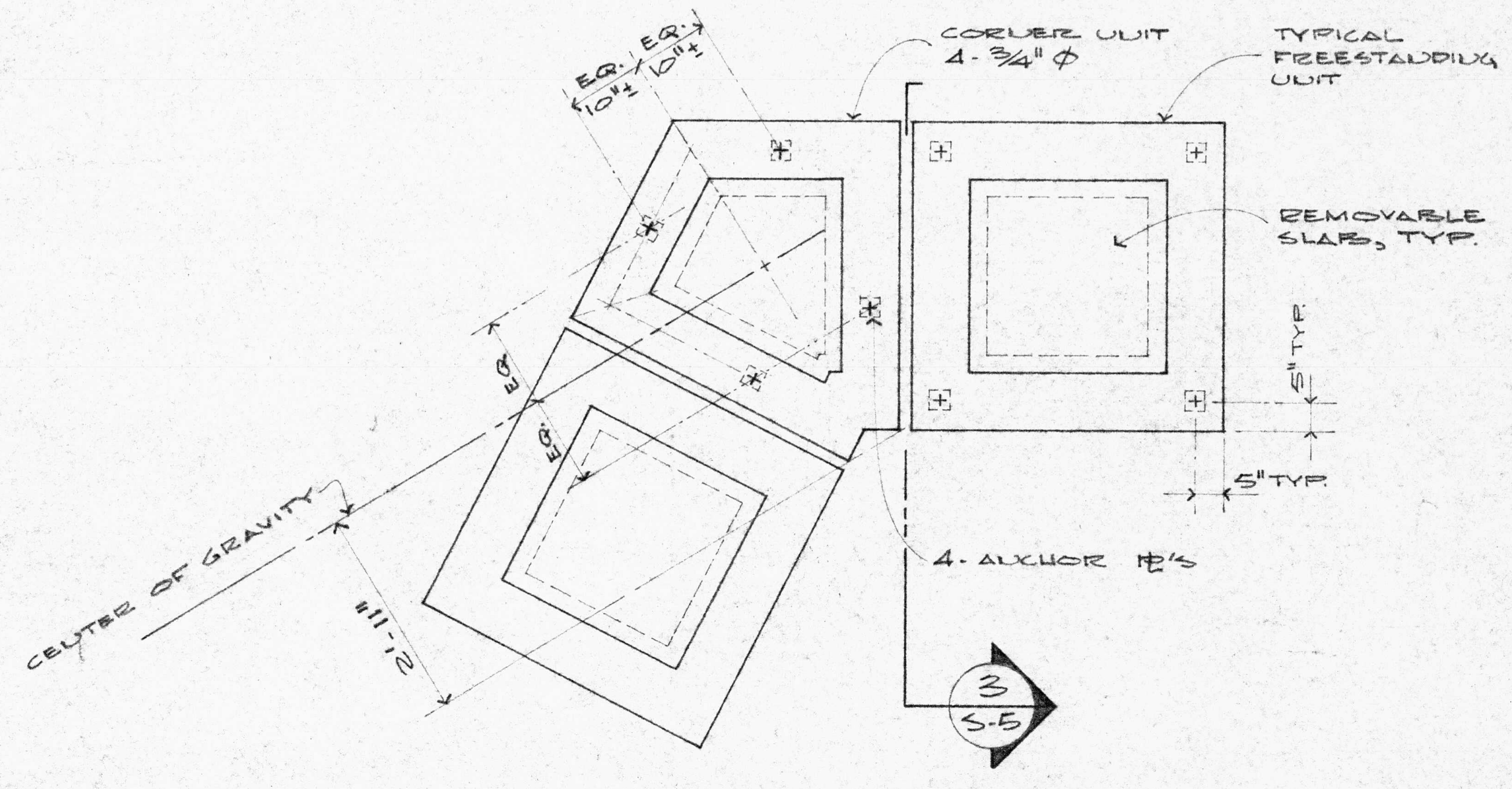

EQ. 10"±
EQ. 10"±
CORNER UNIT 4-3/4"Ø
TYPICAL FREESTANDING UNIT
REMOVABLE SLABS, TYP.
5" TYP.
4-ANCHOR PL'S
CENTER OF GRAVITY

6 S-5 CORNER & TYP. FREESTANDING UNIT - PLAN
1/2" = 1' - 0"

GENERAL NOTE:
SEE SCHEDULE ON SHEET S-6 FOR ANCHORPLATE SIZES, ETC.

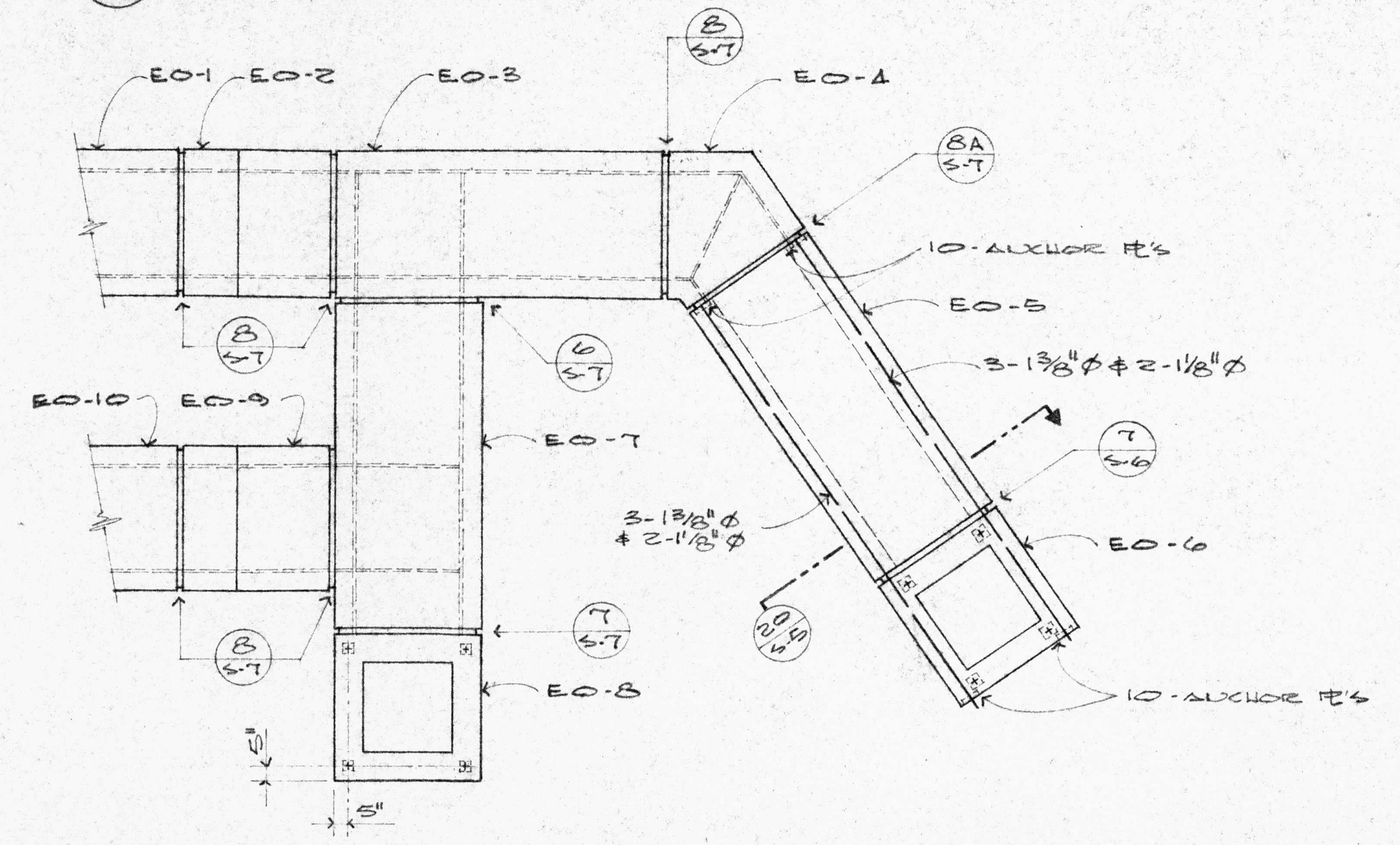

EO-1
EO-2
EO-3
EO-4
10-ANCHOR PL'S
EO-5
3-1 3/8"Ø & 2-1 1/8"Ø
EO-10
EO-9
EO-7
3-1 3/8"Ø & 2-1 1/8"Ø
EO-6
EO-8
10-ANCHOR PL'S

7 S-5 1/4" = 1' - 0"

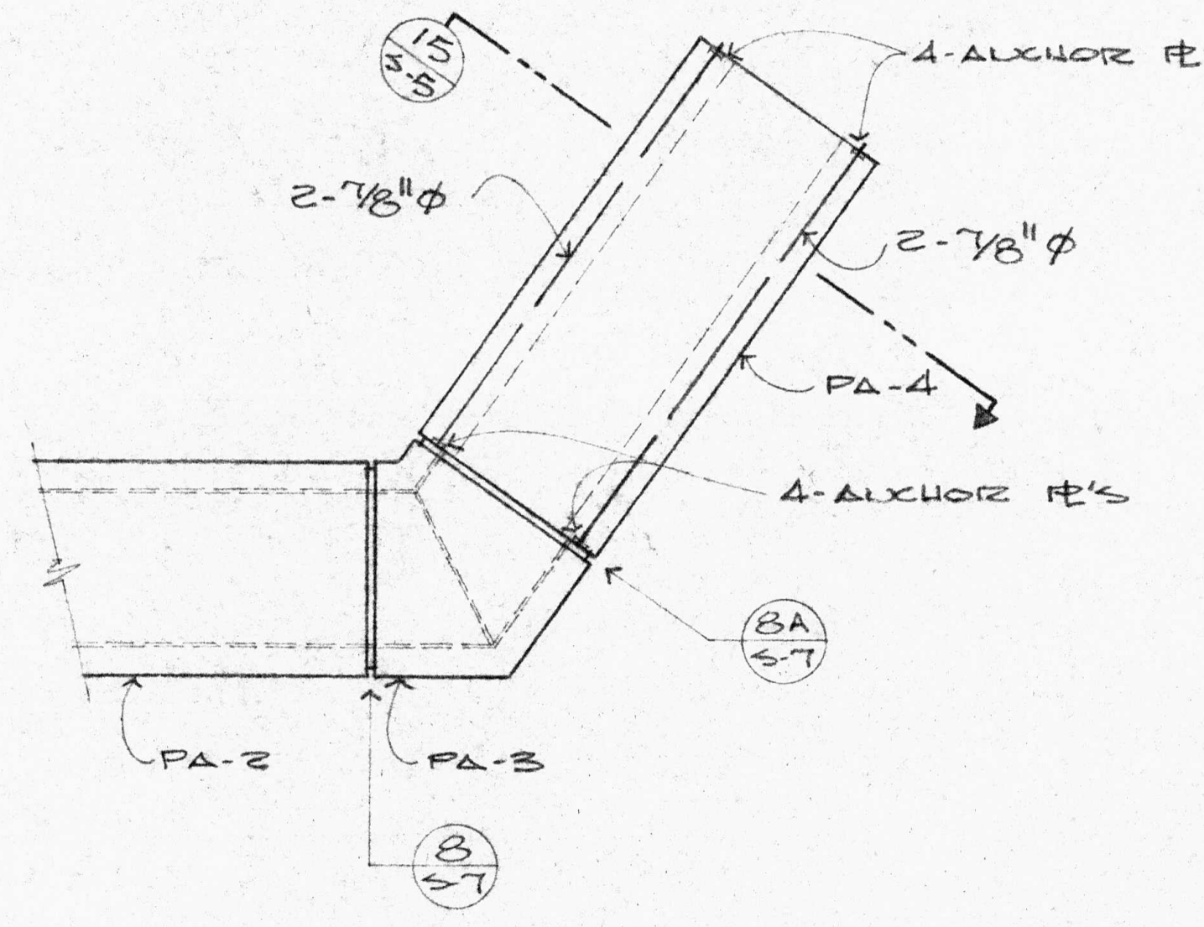

4-ANCHOR PL'S
2-7/8"Ø
2-7/8"Ø
PA-4
4-ANCHOR PL'S
PA-2
PA-3

8 S-5 1/4" = 1' - 0"

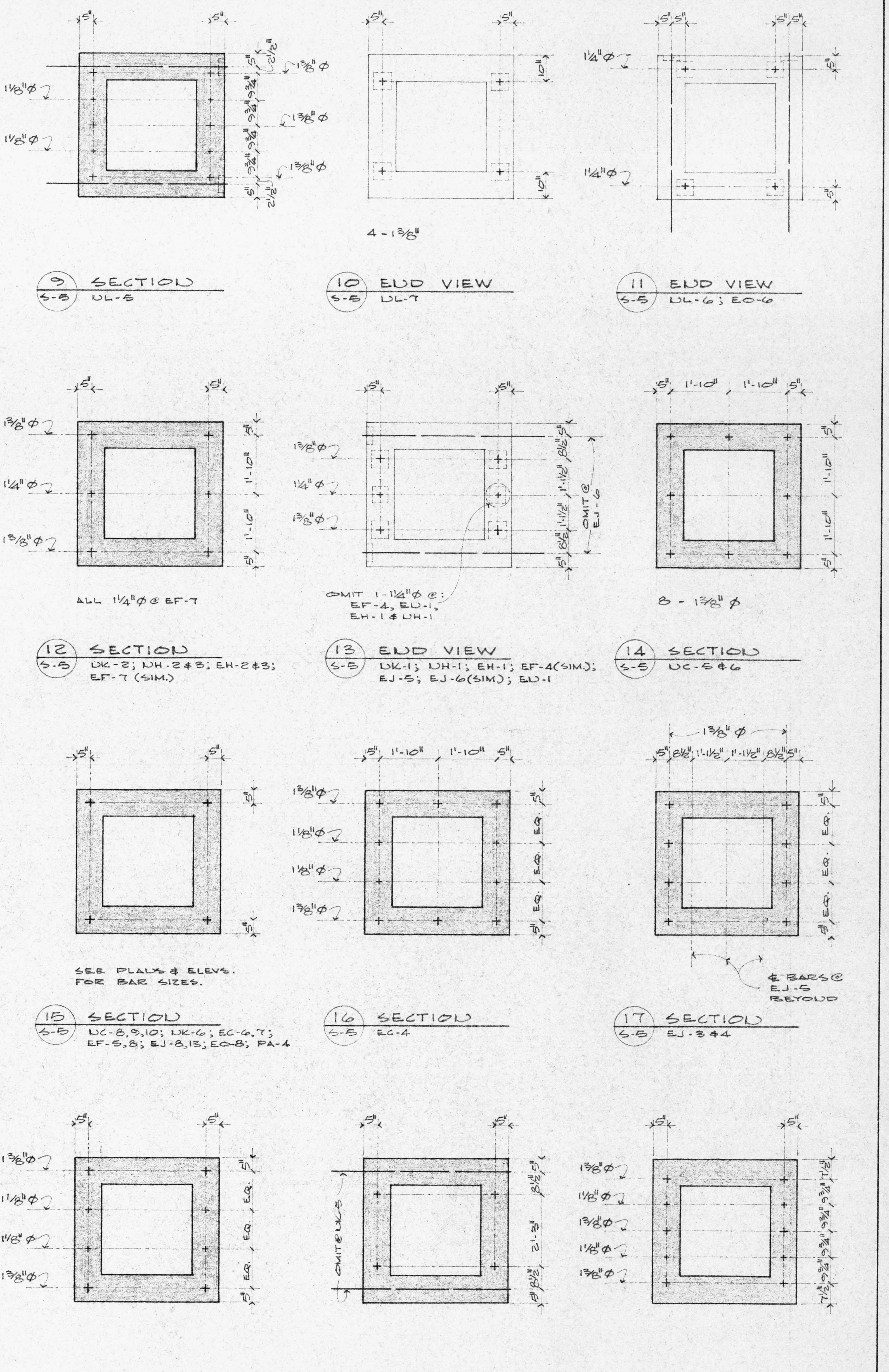

1 3/8"Ø
1 1/4"Ø
4-1 3/8"
ALL 1 1/4"Ø @ EF-7
OMIT 1-1 1/4"Ø @: EF-4, EN-1, EH-1 & NH-1
OMIT @ EJ-6
8-1 3/8"Ø
SEE PLANS & ELEVS. FOR BAR SIZES.
℄ BARS @ EJ-5 BEYOND
OMIT @ NK-5

9 S-5 SECTION
NL-5

10 S-5 END VIEW
NL-7

11 S-5 END VIEW
NL-6; EO-6

12 S-5 SECTION
NK-2; NH-2 & 3; EH-2 & 3; EF-7 (SIM.)

13 S-5 END VIEW
NK-1; NH-1; EH-1; EF-4(SIM.); EJ-5; EJ-6(SIM); EN-1

14 S-5 SECTION
NC-5 & 6

15 S-5 SECTION
NC-8,9,10; NK-6; EC-6,7; EF-5,8; EJ-8,13; EO-8; PA-4

16 S-5 SECTION
EC-4

17 S-5 SECTION
EJ-3 & 4

18 S-5 SECTION
EN-2

19 S-5 SECTION
NK-4; NK-5(SIM.); EN-3

20 S-5 SECTION
EO-5

BAR LOCATIONS AT POST TENSIONED ELEMENTS
1/2" = 1' - 0"

G F D S ENGINEERS
CIVIL & STRUCTURAL ENGINEERS
1620 MONTGOMERY ST., SAN FRANCISCO, CALIFORNIA
Robert Forbes S 1057

EMBARCADERO PLAZA
EMBARCADERO LOWER MARKET APPROVED REDEVELOPMENT PROJECT AREA E1

SCULPTURE
PLANS, ELEVATIONS & DETAILS

SAN FRANCISCO REDEVELOPMENT AGENCY IN COOPERATION
WITH THE SAN FRANCISCO RECREATION AND PARK DEPARTMENT
AND SAN FRANCISCO DEPARTMENT OF PUBLIC WORKS

JOINT VENTURE ARCHITECTS:
LAWRENCE HALPRIN & ASSOCIATES
JOHN S. BOLLES ASSOCIATES
MARIO J. CIAMPI & ASSOCIATES

SCALE: as noted
DATE: JAN. 25, 1969
DRAWN BY: jmo

S5

SHEET S5 OF 8

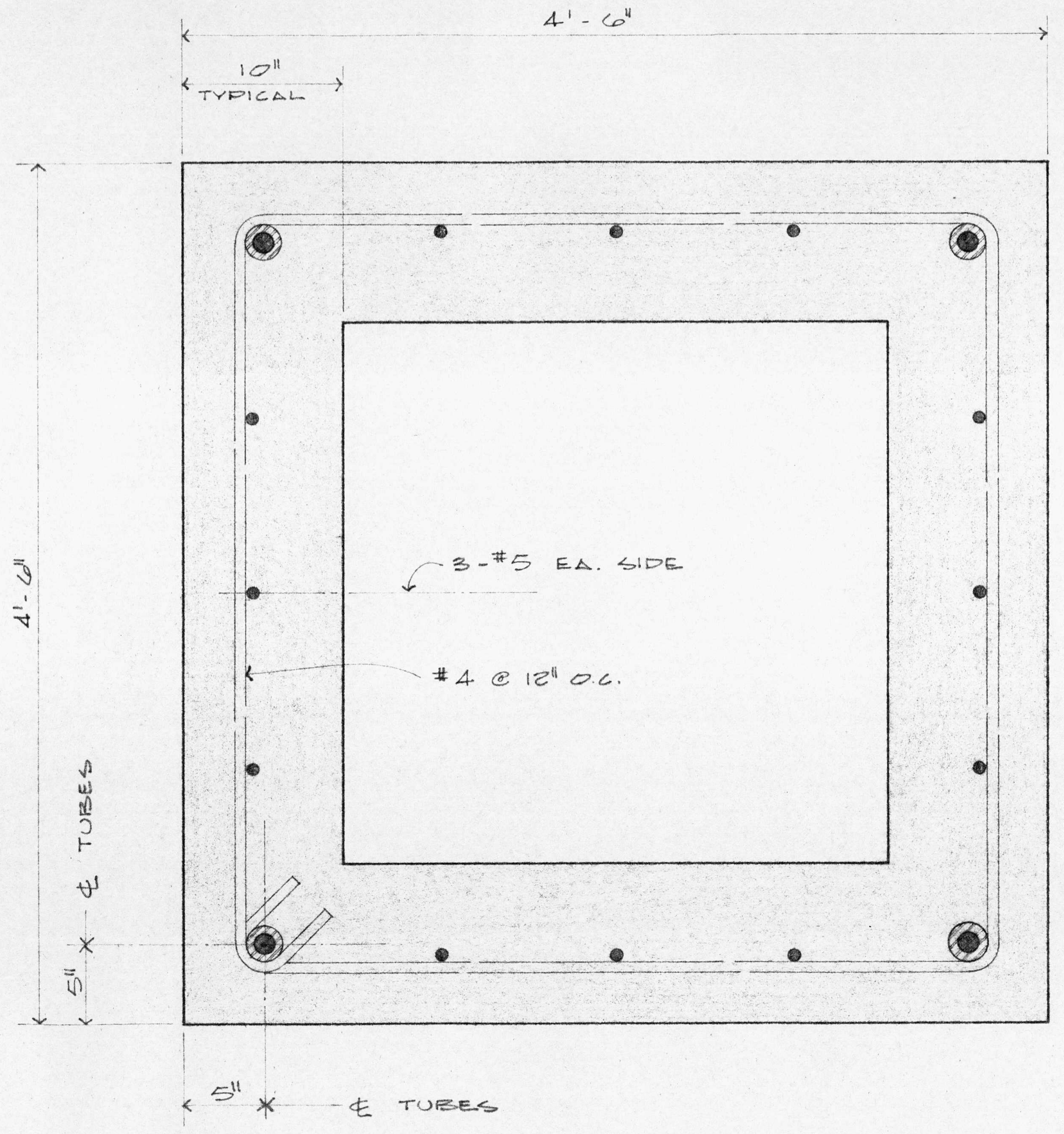
4'-6"
10" TYPICAL
4'-6"
3-#5 EA. SIDE
#4 @ 12" O.C.
℄ TUBES
5"
5"
℄ TUBES

1/S-6 SECTION - TYP. POST TENSIONED ELEMENT
1½" = 1' - 0"

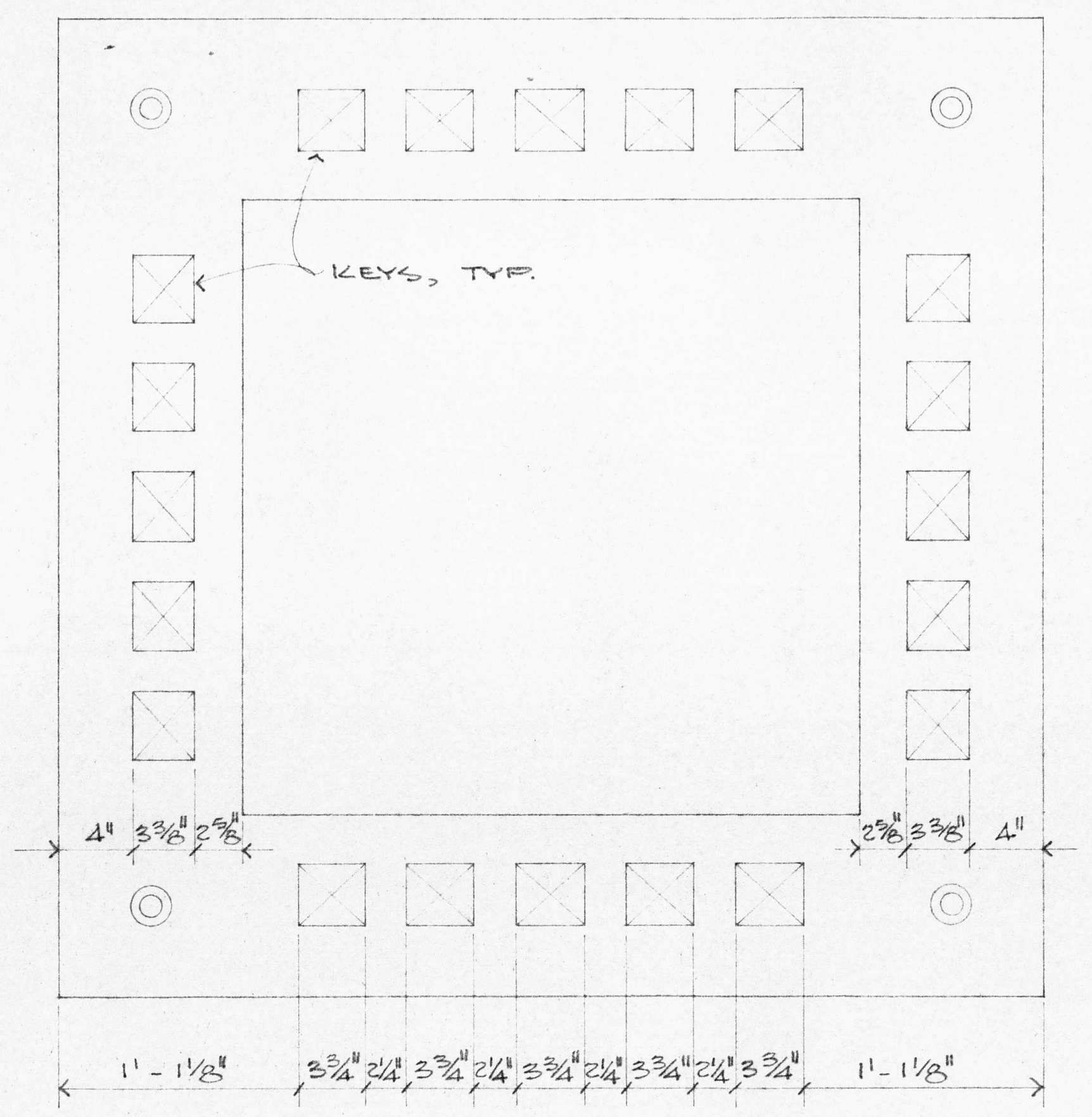
KEYS, TYP.
4" 3⅜" 2⅝"
2⅝" 3⅜" 4"
1'-1⅛"
3¾" 2¼" 3¾" 2¼" 3¾" 2¼" 3¾" 2¼" 3¾"
1'-1⅛"

2/S-6 END VIEW - TYPICAL
1½" = 1' - 0"

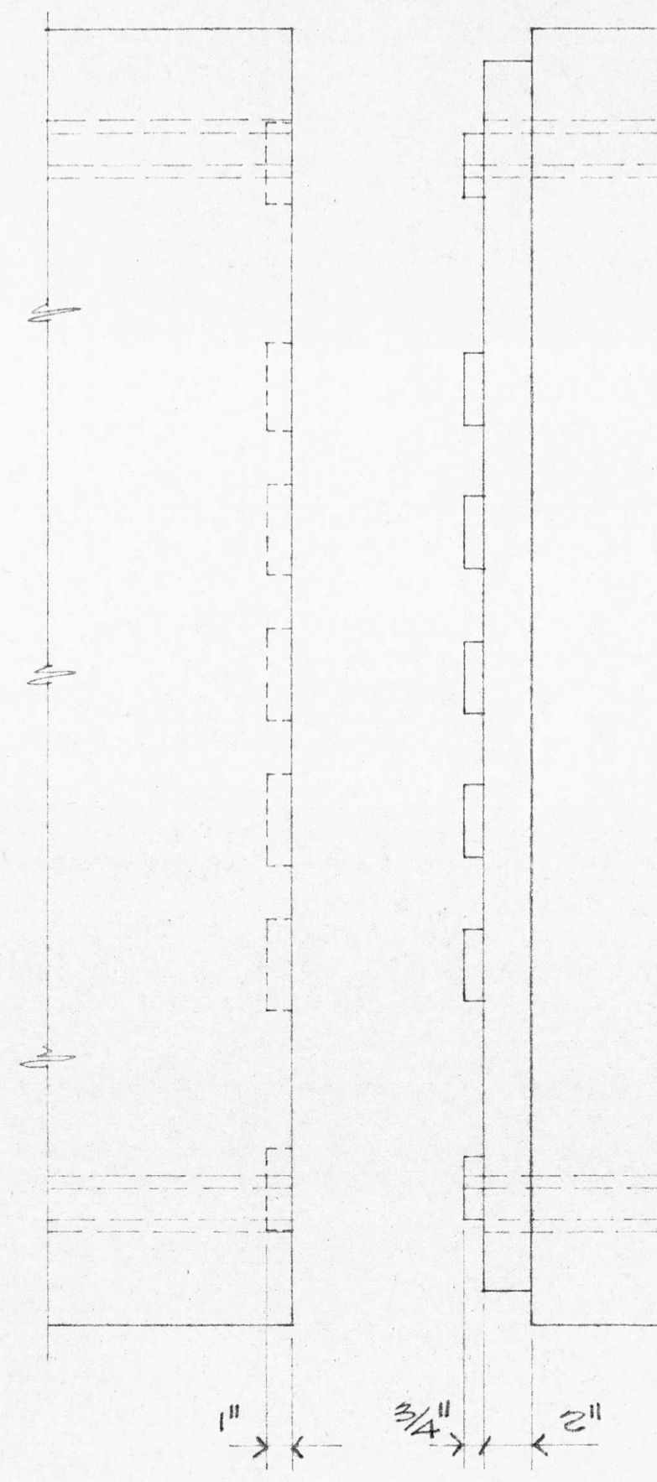

3/S-6 SIDE VIEW OF ENDS
1½" = 1' - 0"

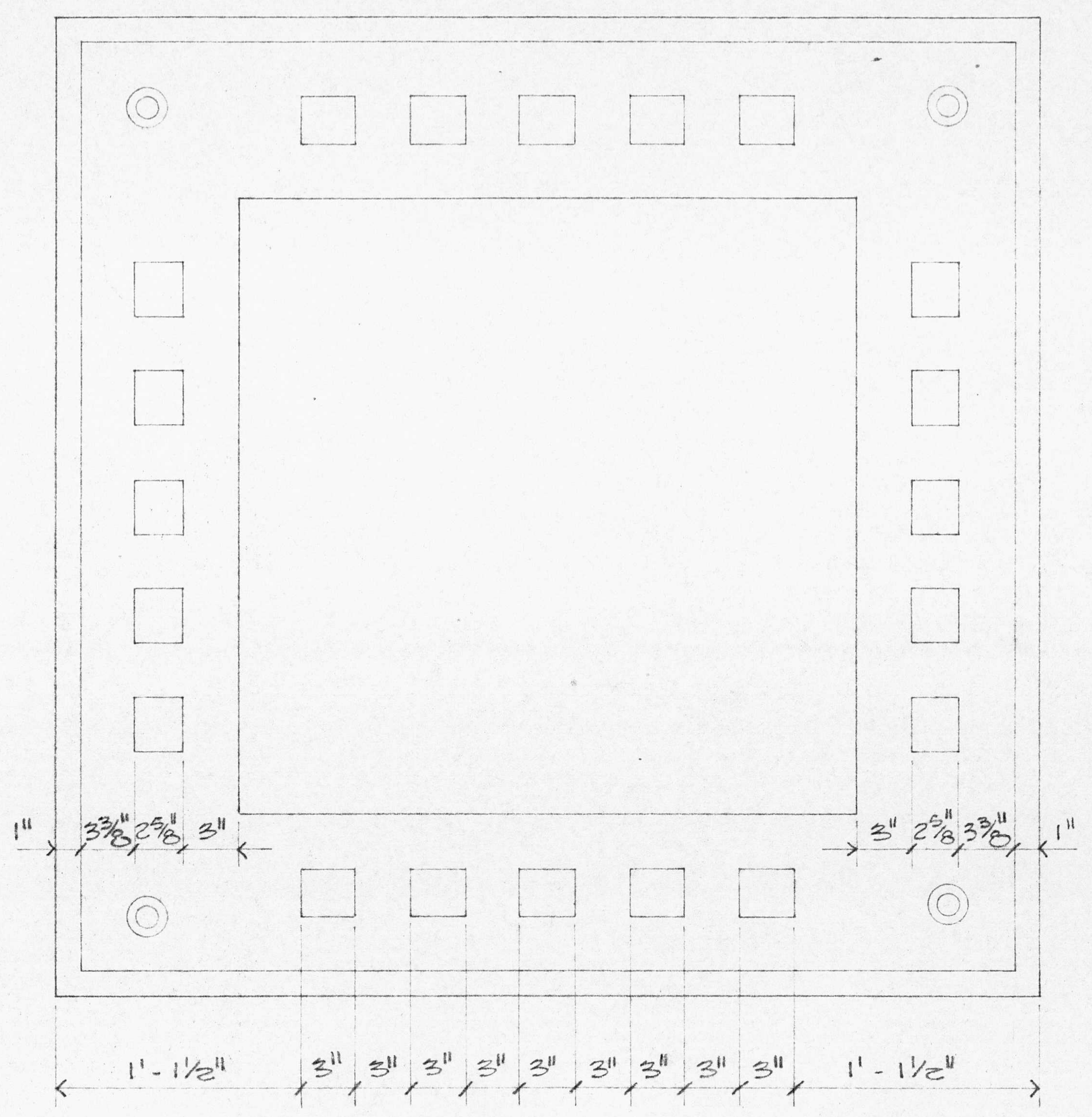
1" 3⅜" 2⅝" 3"
3" 2⅝" 3⅜" 1"
1'-1½"
3" 3" 3" 3" 3" 3" 3" 3" 3"
1'-1½"

4/S-6 END VIEW - TYPICAL
1½" = 1' - 0"

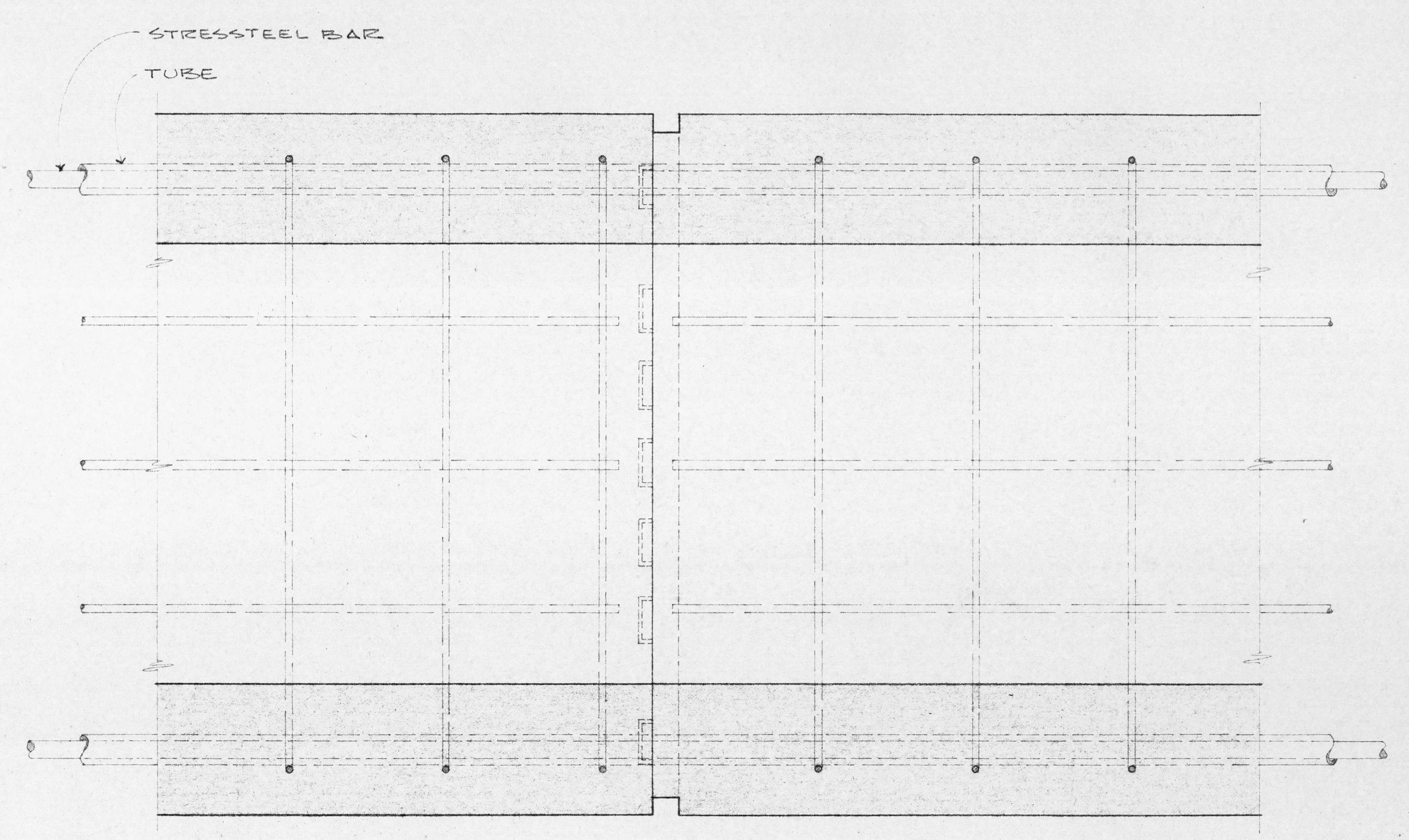
STRESSTEEL BAR
TUBE

NOTE: BEFORE JOINING UNITS, SURFACES IN CONTACT AND KEYS SHALL BE COVERED WITH EPOXY GROUT.

5/S-6 SECTION IN JOINT - TYP. END CONNECTION OF POST TENSIONED ELEMENTS
1½" = 1' - 0"

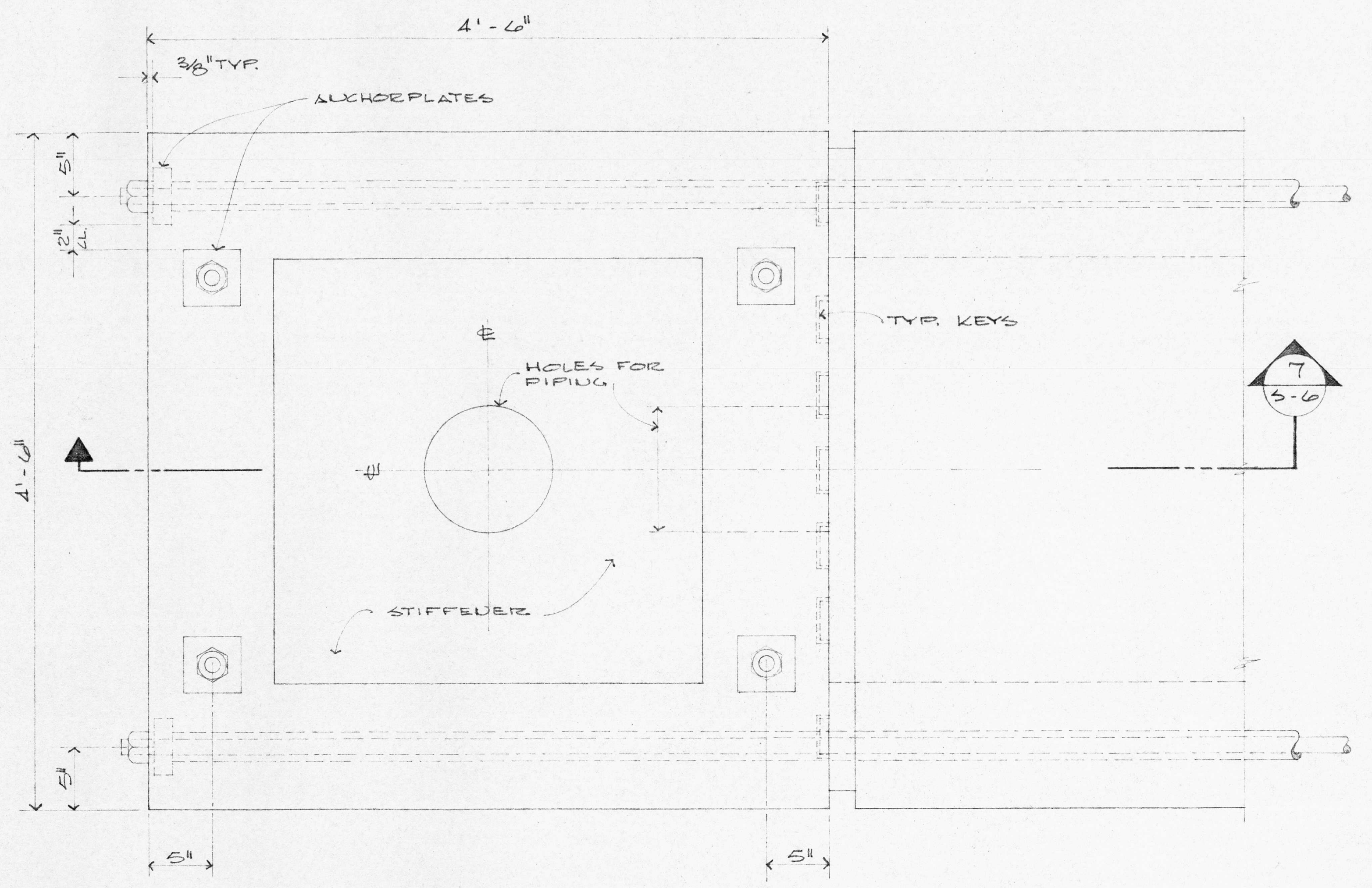
4'-6"
⅜" TYP.
ANCHORPLATES
5"
2¼"
4'-6"
5"
℄
HOLES FOR PIPING
℄
TYP. KEYS
7
S-6
STIFFENER
5"
5"

NOTE:
SIZE, NUMBER & LOCATIONS OF BARS & ANCHOR ℙ'S VARY - SEE PLANS & ELEVS.

6/S-6 PLAN - CONNECTION FOR PERPENDICULAR ELEMENTS
1½" = 1' - 0"

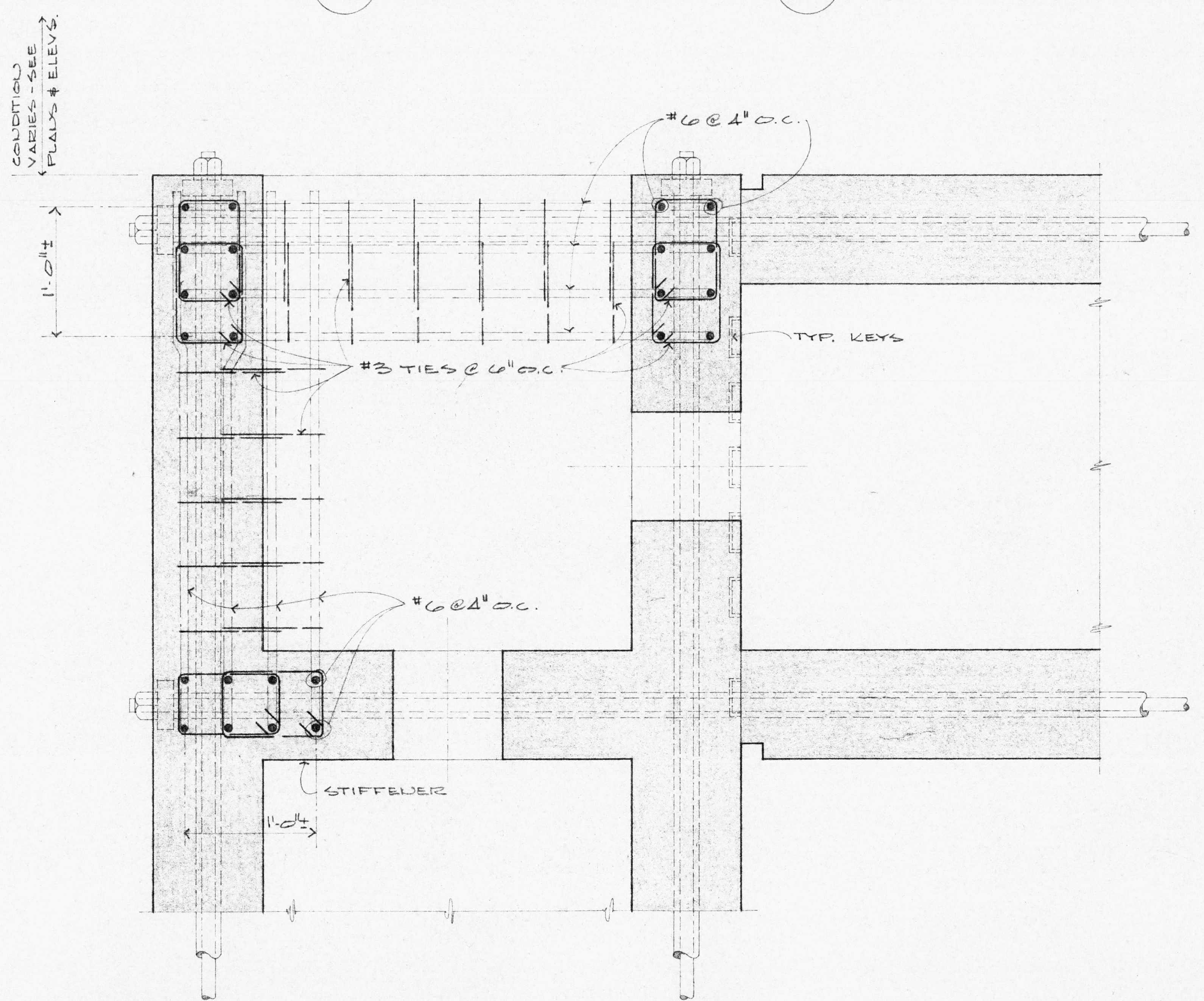
CONDITION VARIES - SEE PLANS & ELEVS.
1'-0"±
#6 @ 4" O.C.
#3 TIES @ 6" O.C.
TYP. KEYS
#6 @ 4" O.C.
STIFFENER
1'-0"±

7/S-6 SECTION
1½" = 1' - 0"

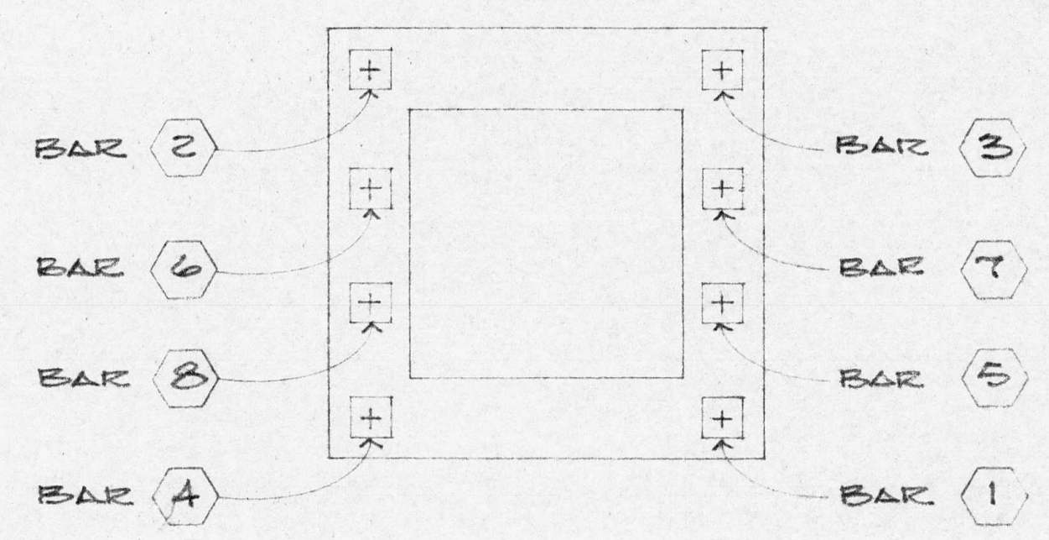
BAR 2
BAR 6
BAR 8
BAR 4
BAR 3
BAR 7
BAR 5
BAR 1

8 BAR ELEMENTS

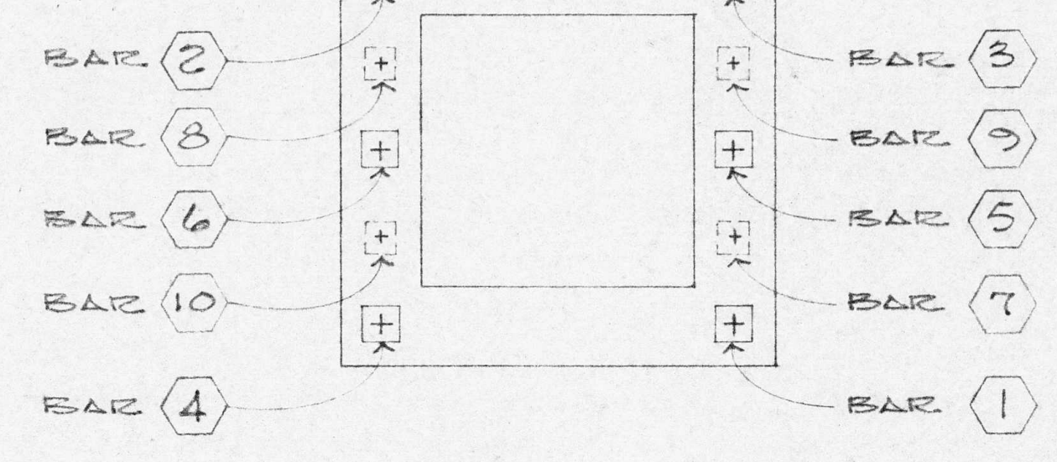
BAR 2
BAR 8
BAR 6
BAR 10
BAR 4
BAR 3
BAR 9
BAR 5
BAR 7
BAR 1

4, 6 & 10 BAR ELEMENTS

SEQUENCE BARS NUMBER	MAXIMUM STRESS TO BE APPLIED IN ADDITION TO PREVIOUS
1	30ᵏ
2	70ᵏ
1	120ᵏ OR FINAL STRESS
2	80ᵏ OR FINAL STRESS
3	80ᵏ OR FINAL STRESS
4	150ᵏ OR FINAL STRESS
3	70ᵏ OR FINAL STRESS
5	150ᵏ OR FINAL STRESS
6	150ᵏ OR FINAL STRESS
BALANCE	STRESS SYMMETRICALLY IN ORDER SHOWN BY NUMBERS.

BAR DIA.	FINAL DESIGN LOAD	ANCHOR ℙ SIZE
1⅜" ϕ	143ᵏ	6½"x6½"x2"
1¼" ϕ	118ᵏ	6"x6"x1¾"
1⅛" ϕ	95ᵏ	5½"x5½"x1¾"
1" ϕ	75ᵏ	5"x5"x1½"
⅞" ϕ	58ᵏ	4½"x4½"x1½"
¾" ϕ	42ᵏ	4"x4"x1"

GENERAL NOTE:
ANCHOR ℙ'S SHALL BE EITHER THREADED OR DRILLED FOR PASSAGE OF BARS. UN-THREADED ANCHOR ℙ'S SHALL HAVE NUTS. ALL AS REQUIRED AND/OR AS DIRECTED TO ALLOW FOR PROPER SEQUENCE OF INSTALLATION.

EXCEPTION: FOR STRUCTURE NH-1 & EH-1 USES WEDGES IN LIEU OF NUTS.

NOTE: ALL ANCHOR PLATES, NUTS, WEDGES & END 1' OF BARS TO BE GALVANIZED.

8/S-6 STRESSING SEQUENCE & ANCHOR ℙ SIZES

G F D S ENGINEERS
CIVIL & STRUCTURAL ENGINEERS
1620 MONTGOMERY ST., SAN FRANCISCO, CALIFORNIA
Robert Forsberg S1057

EMBARCADERO PLAZA
EMBARCADERO LOWER MARKET APPROVED REDEVELOPMENT PROJECT AREA E1

SCULPTURE
SECTIONS & DETS.- POST TENSIONED ELEMENTS

SAN FRANCISCO REDEVELOPMENT AGENCY IN COOPERATION
WITH THE SAN FRANCISCO RECREATION AND PARK DEPARTMENT
AND SAN FRANCISCO DEPARTMENT OF PUBLIC WORKS

JOINT VENTURE ARCHITECTS:
LAWRENCE HALPRIN & ASSOCIATES
JOHN S. BOLLES ASSOCIATES
MARIO J. CIAMPI & ASSOCIATES

SCALE: as noted
DATE: JAN. 25, 1969
DRAWN BY: jmo

S6

SHEET S6 OF 8

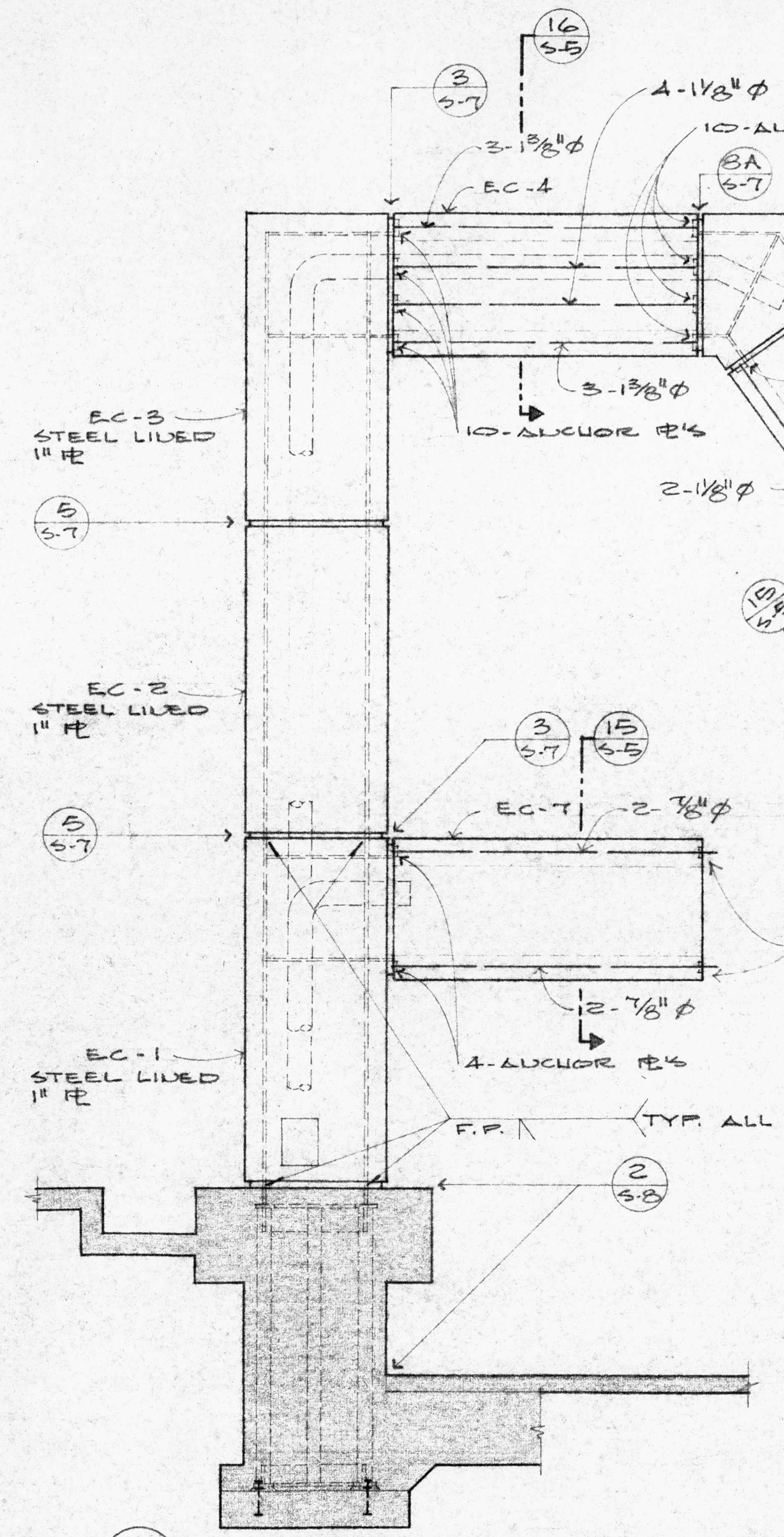

EC-4
EC-5 STEEL LINED
4-1⅛"⌀
10-ANCHOR PL's
3-1⅜"⌀
EC-3 STEEL LINED 1" PL
4-ANCHOR PL's
EC-6
2-1⅛"⌀
EC-2 STEEL LINED 1" PL
EC-7
2-⅞"⌀
EC-1 STEEL LINED 1" PL
F.F.
TYP. ALL UNITS

① STRUCTURE EC - ELEV.
S-4 ¼" = 1'-0"

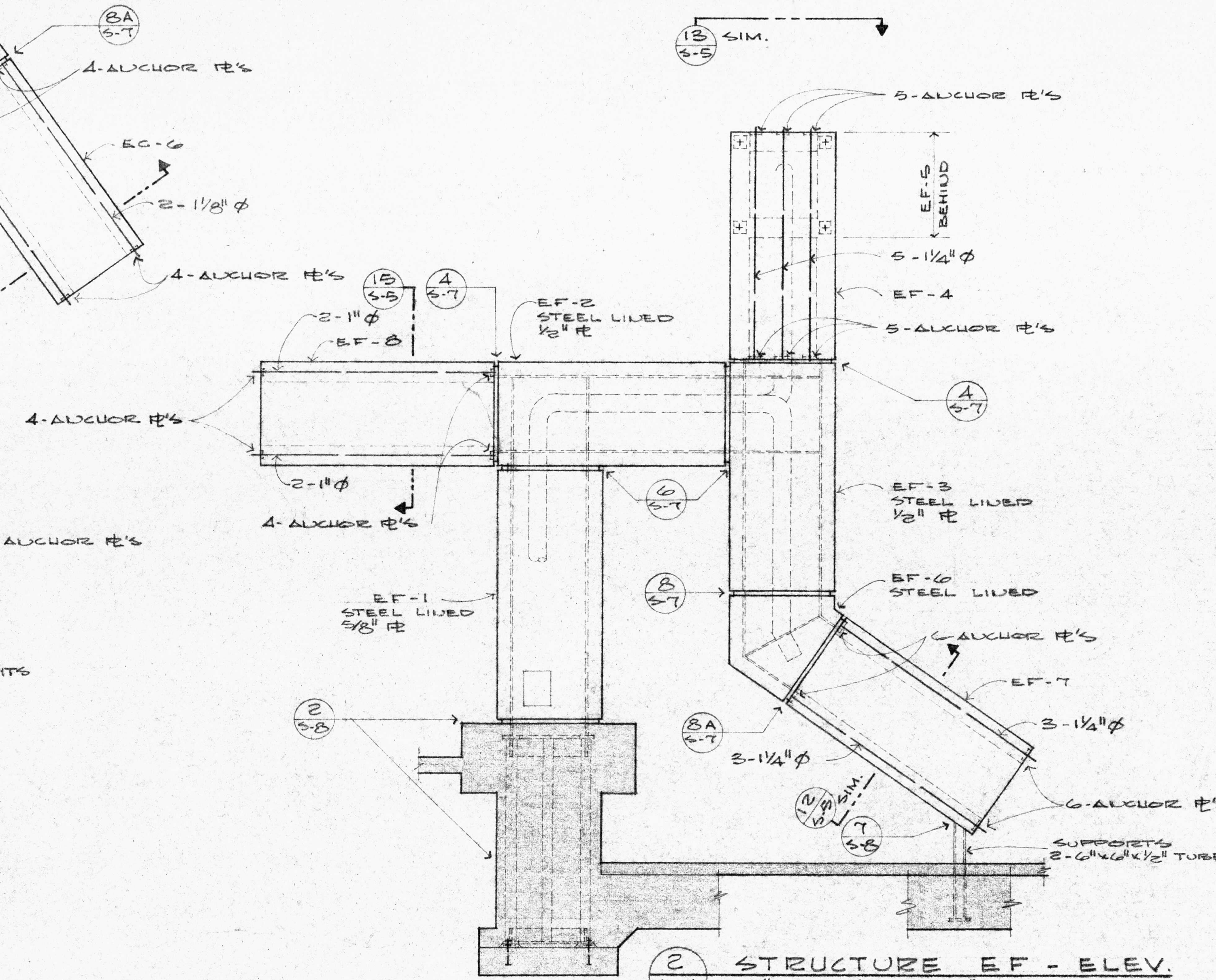

18 S-5 SIM.
5-ANCHOR PL's
EF-5 BEHIND
5-1¼"⌀
EF-4
EF-2 STEEL LINED ⅝" PL
3-1"⌀
EF-8
4-ANCHOR PL's
EF-3 STEEL LINED ⅝" PL
EF-1 STEEL LINED ⅝" PL
EF-6 STEEL LINED
EF-7
3-1½"⌀
3-1¼"⌀
SUPPORTS 2-6"x6"x½" TUBES

② STRUCTURE EF - ELEV.
S-4 ¼" = 1'-0"

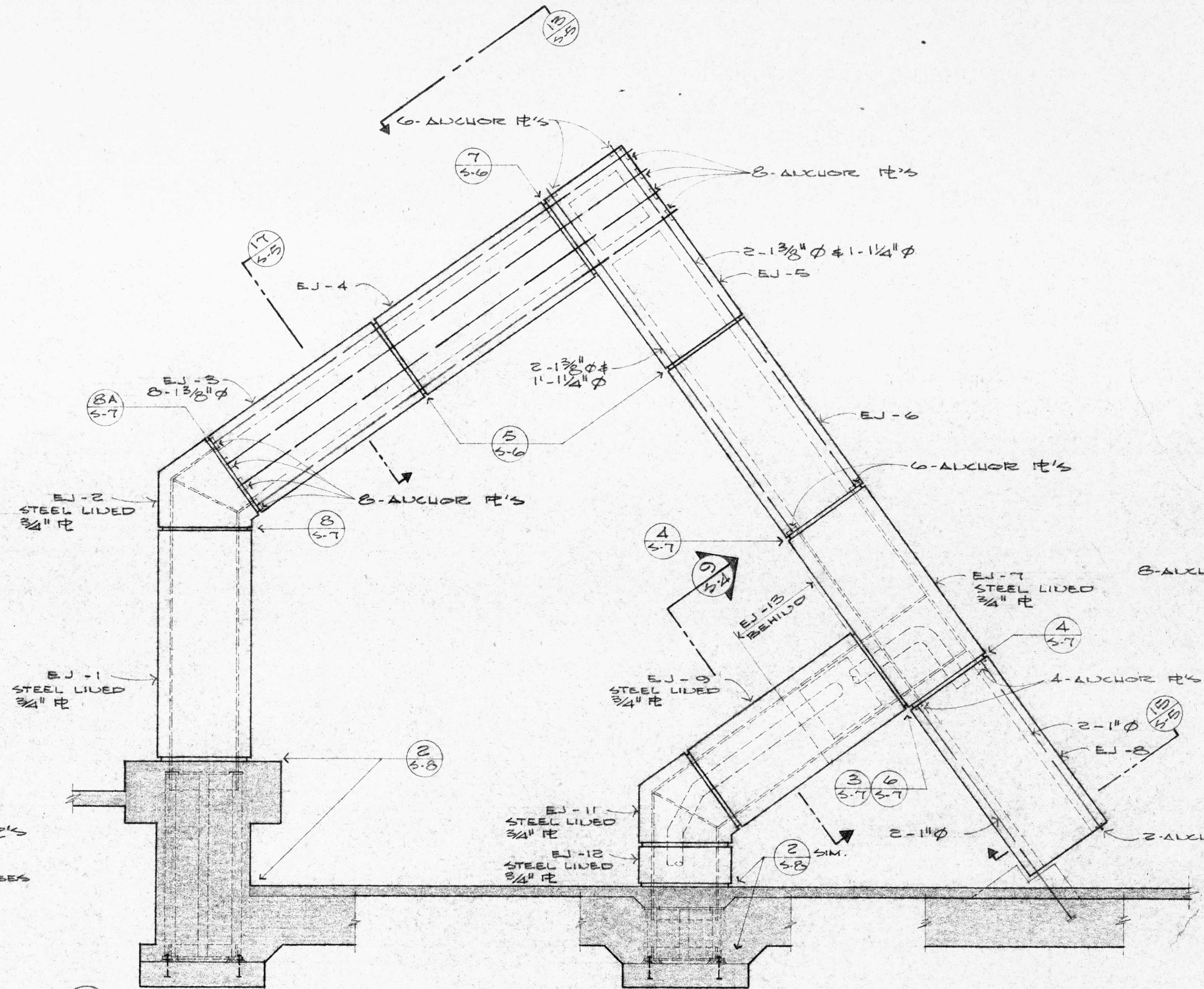

6-ANCHOR PL's
8-ANCHOR PL's
2-1⅜"⌀ & 1-1¼"⌀
EJ-5
EJ-4
EJ-3
EJ-6
EJ-2 STEEL LINED ¾" PL
EJ-1 STEEL LINED ¾" PL
EJ-13 BEHIND
EJ-7 STEEL LINED ¾" PL
EJ-9 STEEL LINED ¾" PL
EJ-8
EJ-11 STEEL LINED ¾" PL
EJ-12 STEEL LINED ¾" PL
2-1"⌀
3-ANCHOR PL's

③ STRUCTURE EJ - ELEVATION
S-4 ¼" = 1'-0"

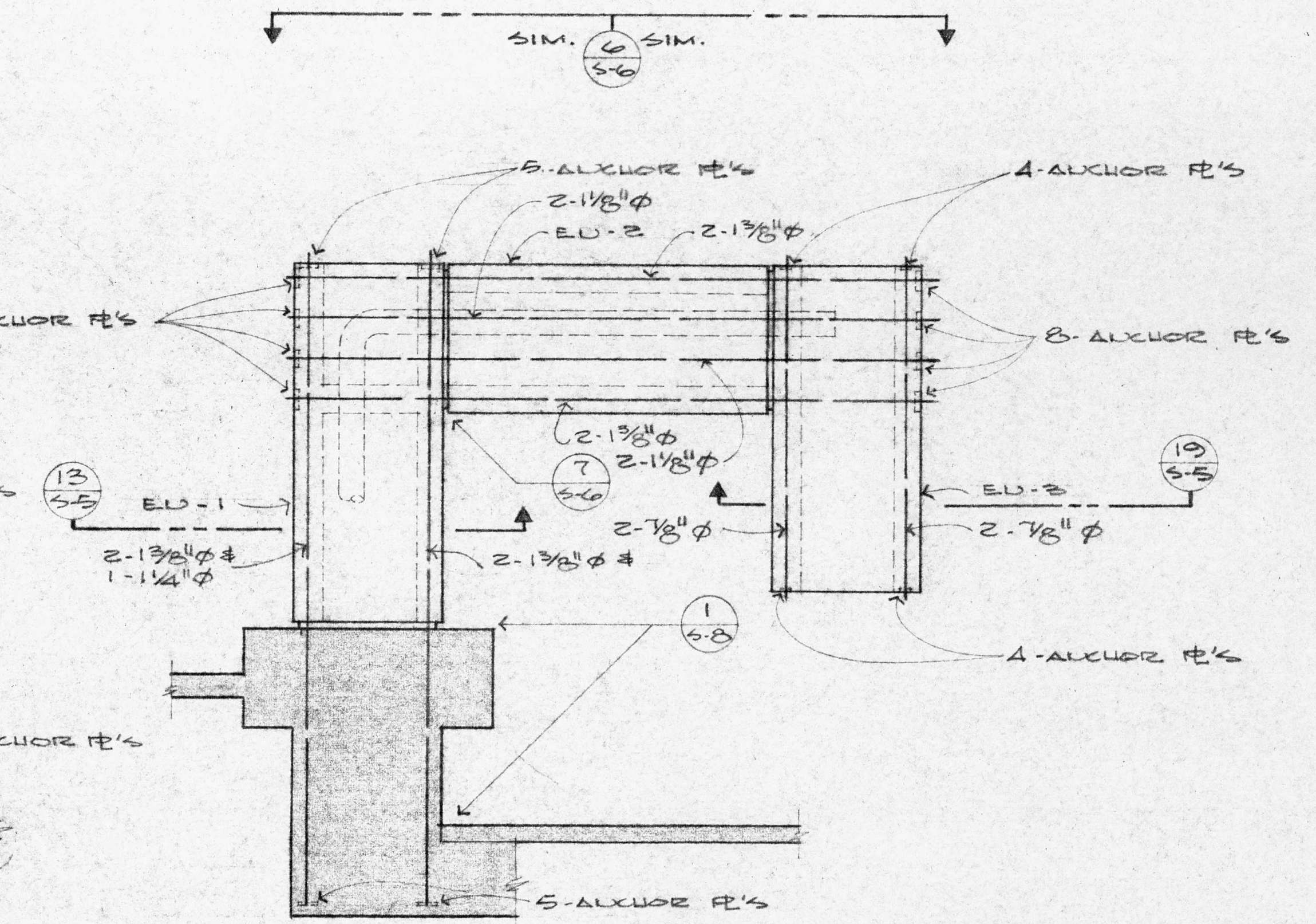

SIM. 6 S-6 SIM.
8-ANCHOR PL's
2-1⅛"⌀
EN-2
2-1⅜"⌀
4-ANCHOR PL's
EN-1
EN-3
2-⅞"⌀
2-1⅜"⌀ & 1-1¼"⌀
5-ANCHOR PL's

④ STRUCTURE EN - ELEVATION
S-4 ¼" = 1'-0"

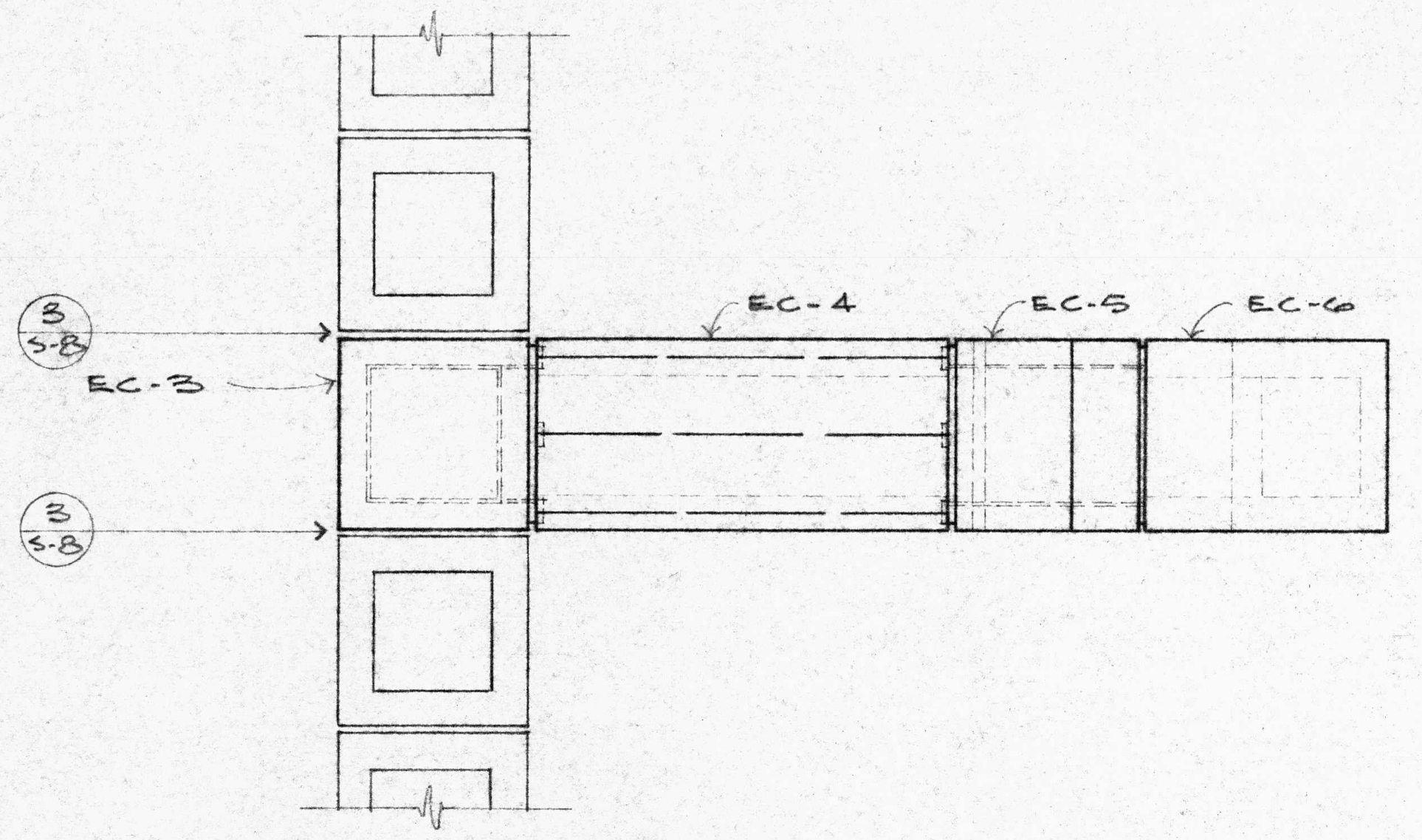

EC-3
EC-4
EC-5
EC-6

⑤ STRUCTURE EC - PLAN
S-4 ¼" = 1'-0"

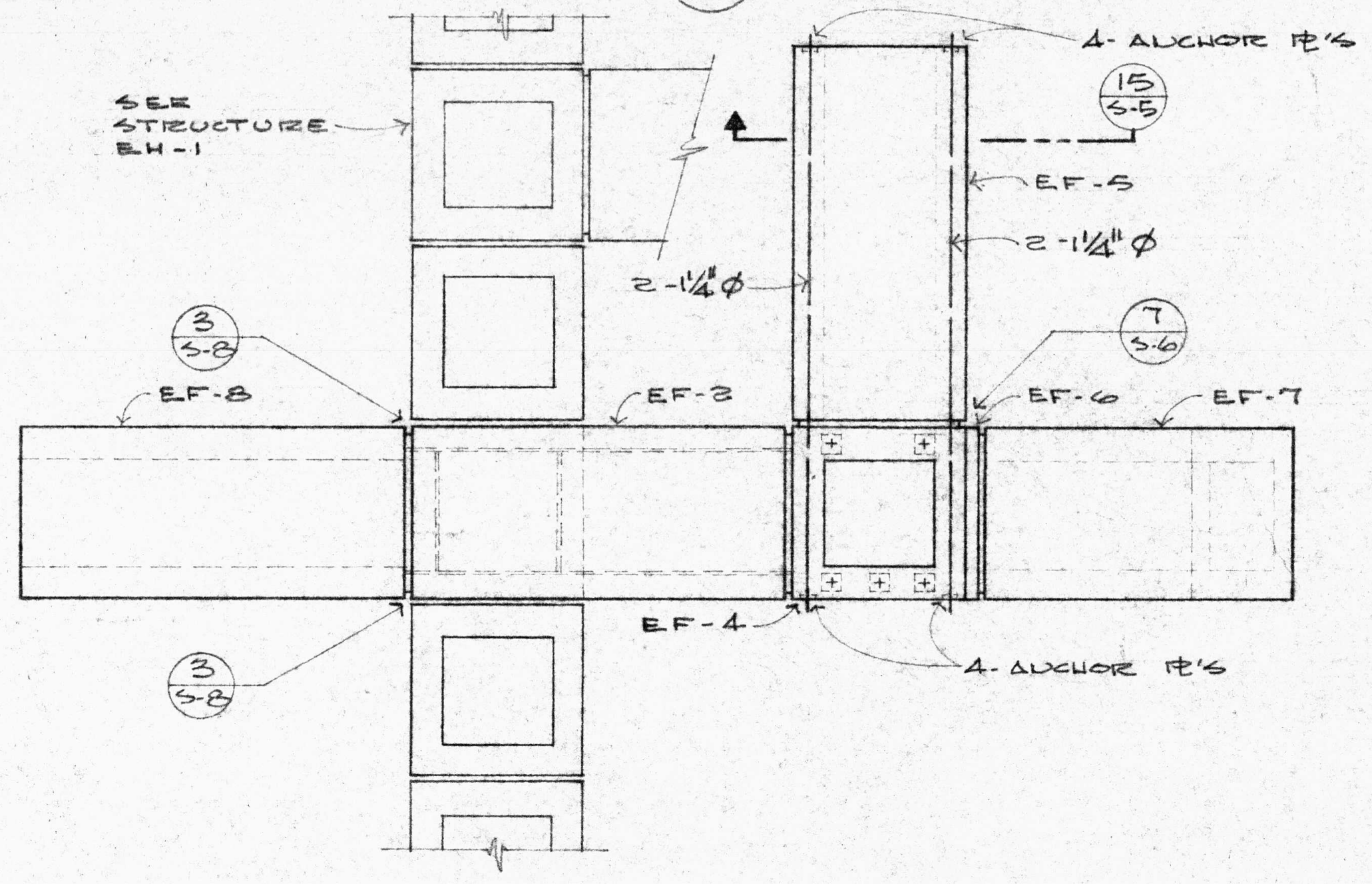

SEE STRUCTURE EH-1
4-ANCHOR PL's
EF-5
2-1¼"⌀
EF-8
EF-3
EF-6
EF-7
EF-4
4-ANCHOR PL's

⑥ STRUCTURE EF - PLAN
S-4 ¼" = 1'-0"

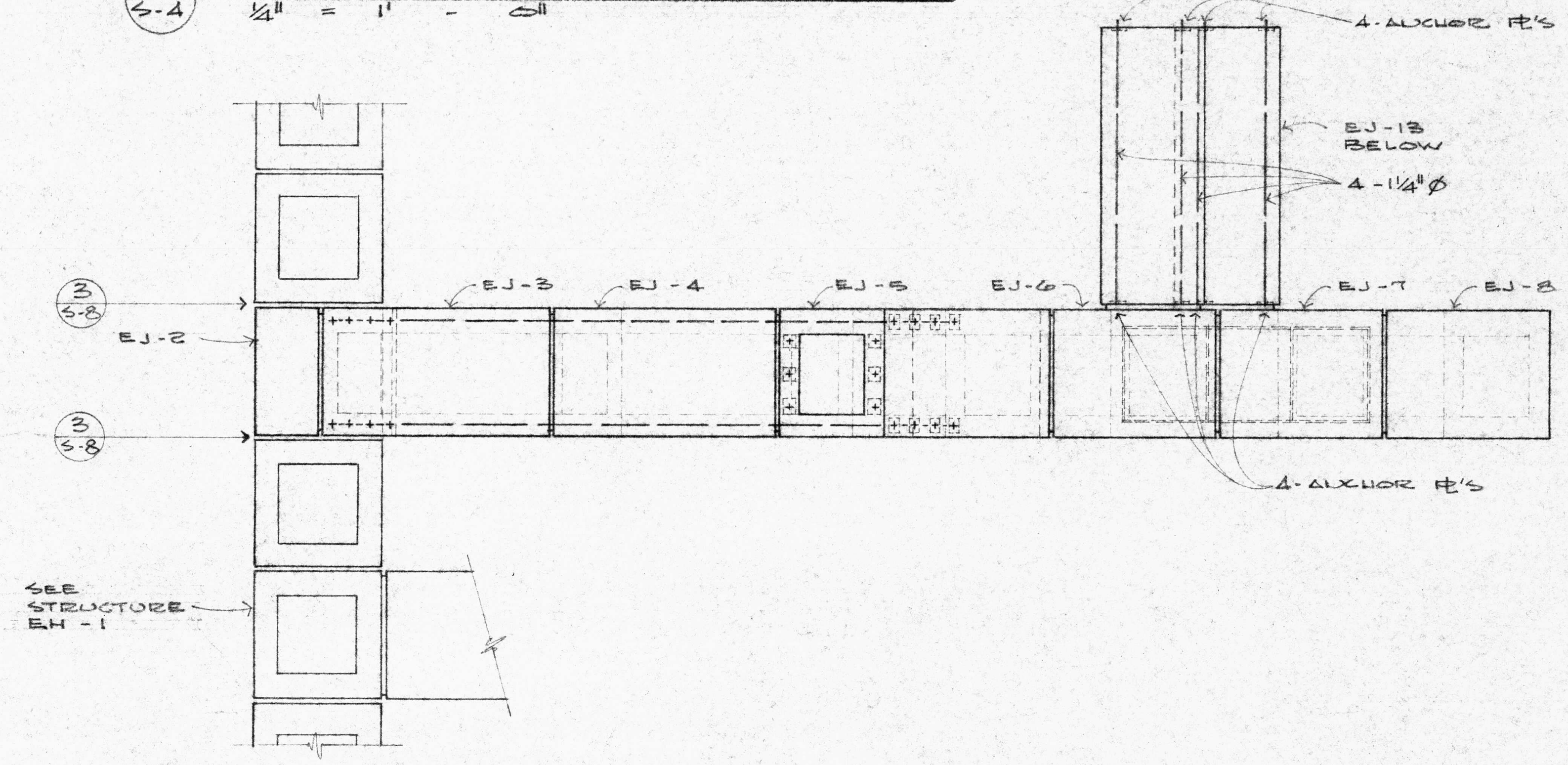

4-ANCHOR PL's
EJ-13 BELOW
4-1¼"⌀
EJ-2
EJ-3
EJ-4
EJ-5
EJ-6
EJ-7
EJ-8
4-ANCHOR PL's
SEE STRUCTURE EH-1

⑦ STRUCTURE EJ - PLAN
S-4 ¼" = 1'-0"

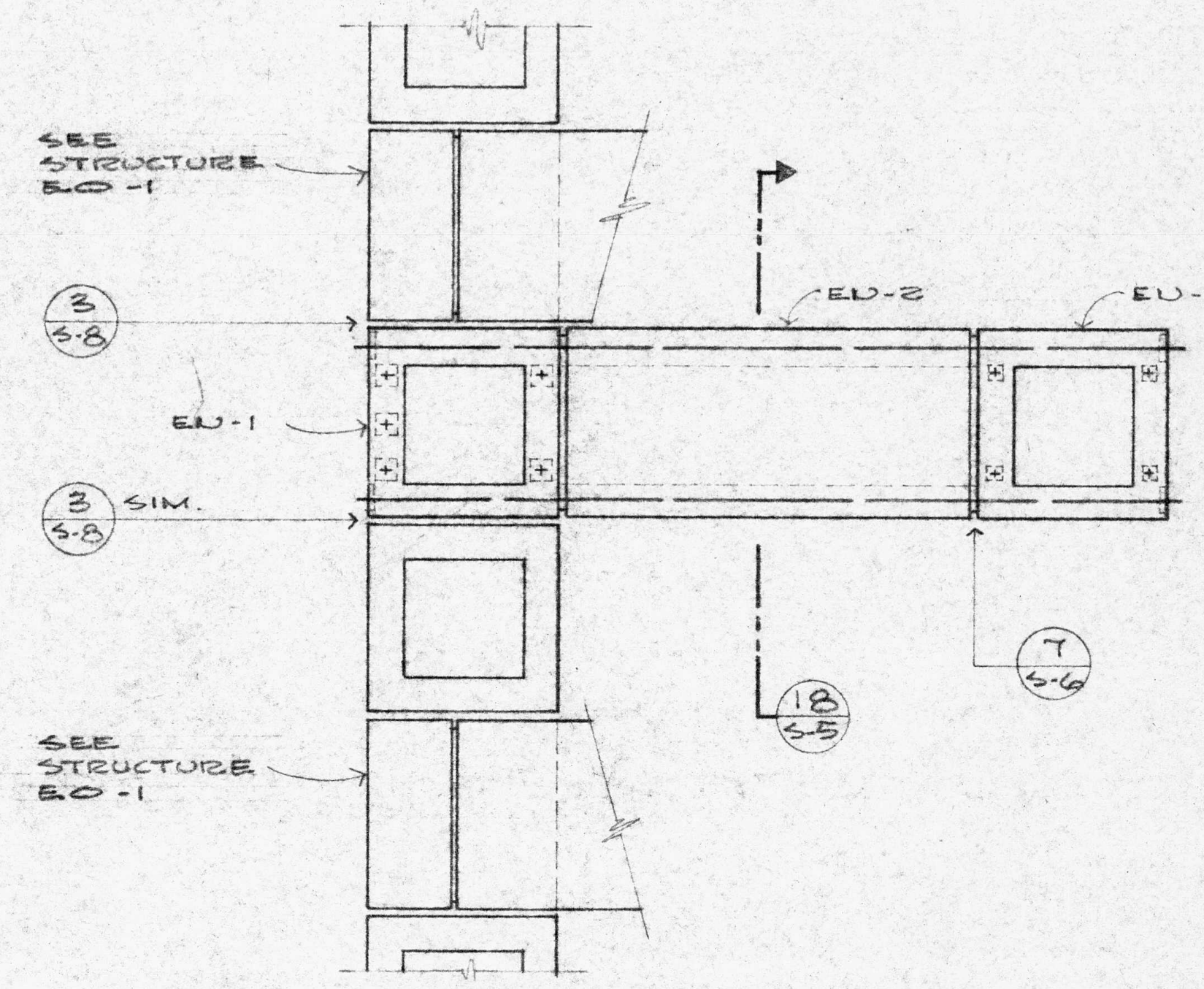

SEE STRUCTURE EO-1
EN-2
EN-3
EN-1
SEE STRUCTURE EO-1

⑧ STRUCTURE EN - PLAN
S-4 ¼" = 1'-0"

NOTES:

1. ALL BARS SHOWN ARE SPECIAL STRESSTEEL BARS (ULT. STRENGTH 160 KSI MIN.)
2. SEE SCHEDULE ON SHEET S-6 FOR ANCHOR PL SIZES, ETC.

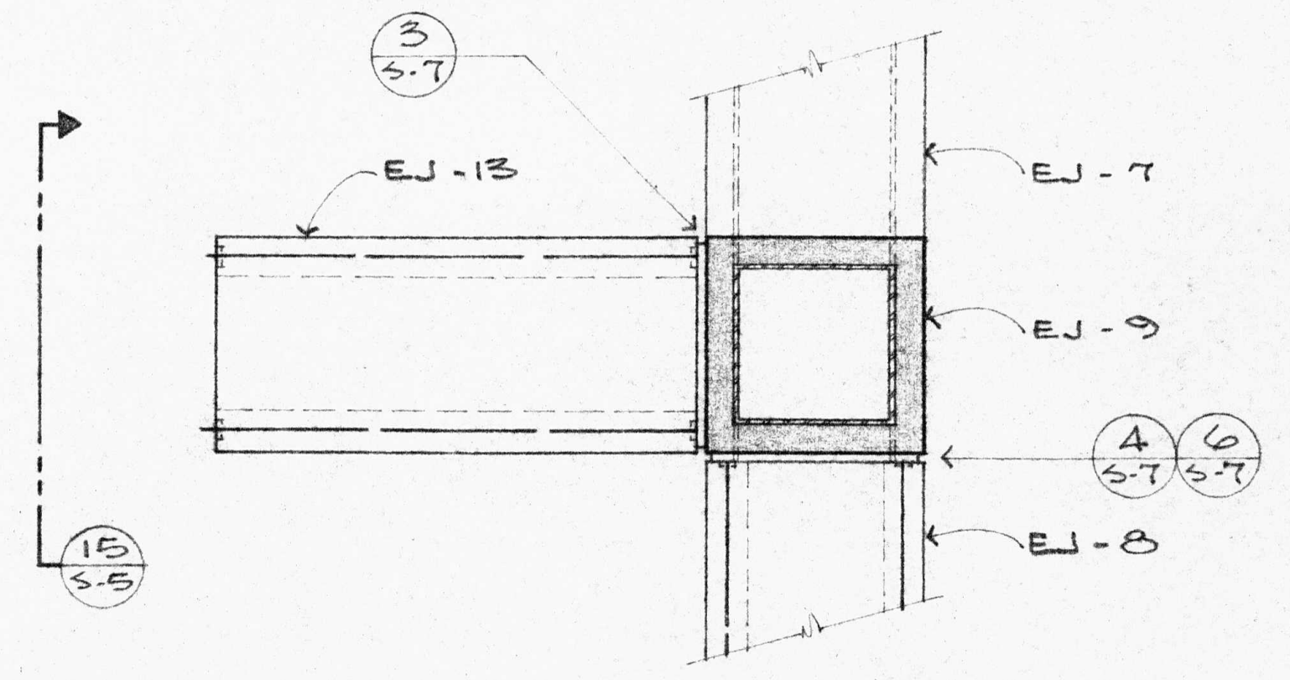

EJ-13
EJ-7
EJ-9
EJ-8

⑨
S-4 ¼" = 1'-0"

GFDS ENGINEERS
CIVIL & STRUCTURAL ENGINEERS
1620 MONTGOMERY ST., SAN FRANCISCO, CALIFORNIA
S 1057

EMBARCADERO PLAZA
EMBARCADERO LOWER MARKET APPROVED REDEVELOPMENT PROJECT AREA E1

SCULPTURE
PLANS & ELEVATIONS

SAN FRANCISCO REDEVELOPMENT AGENCY IN COOPERATION
WITH THE SAN FRANCISCO RECREATION AND PARK DEPARTMENT
AND SAN FRANCISCO DEPARTMENT OF PUBLIC WORKS

JOINT VENTURE ARCHITECTS:
LAWRENCE HALPRIN & ASSOCIATES
JOHN S. BOLLES ASSOCIATES
MARIO J. CIAMPI & ASSOCIATES

SCALE: as noted
DATE: JAN. 25, 1969
DRAWN BY: jmo

S4

SHEET S4 OF 8

GENERAL NOTES & TYPICAL DETAILS

"General Notes & Typical Details" apply to all details, sections and drawings unless otherwise shown or noted.

Features of construction not fully shown shall be of the same character as shown for similar conditions.

Elevations: S.A.D. for datum.

Dimensions: Contractor shall verify all dimensions before starting work and the Architect shall be notified immediately of any discrepancies found.

Codes: All materials, workmanship and construction shall be in accordance with the requirements of applicable local codes and ordinances.

Existing Conditions: Contractor shall verify dimensions and elevation of existing construction and other existing conditions at the site.

SYMBOLS AND ABBREVIATIONS

A.B.	- Anchor bolts	o.o	- Out to out
B.D.	- Bar diameters	P.E.M.	- Premoulded e.j. filler
Bm.	- Beam	S.A.D.	- See Architectural Drawings
c.c.	- Center to Center	S.E.D.	- See Electrical Drawings
c.j.	- Cold joint or construction joint	S.M.D.	- See Mechanical Drawings
℄	- Centerline	S.P.D.	- See Plumbing Drawings
Cont.	- Continuous	T. & B.	- Top and Bottom
D.L.	- Dead Load	T. W.	- Top of Wall
e.j.	- Expansion Joint	Typ.	- Typical
El.	- Elevation	U.O.N.	- Unless otherwise noted
E.W.	- Each Way	(V)	- Vertical
F.O.C.	- Face of Concrete	w/	- with
F.S.	- Far side	W.M.	- Waterproof Membrane
Gd. Bm.	- Grade Beam	W.W.M.	- Welded Wire Mesh
(H)	- Horizontal	CS4	- Section "C" on Sheet S4
L.L.	- Live Load	CS4	- Detail "C" on Sheet S4
N.S.	- Near Side	▨	- Precast concrete in Sect.
N.W.C.	- Normal Wt. Concrete	▩	- Poured in place concrete in section
o.c.	- on center	+0'-0	- Elev. bottom of footing
		▦	- Brick shown in section

FOUNDATION NOTES

See Soils Report entitled "Report, Soil Investigation, Ferry Building Park, San Francisco, Calif. for San Francisco Redevelopment Agency" dated May 5, 1966 as prepared by Harding, Miller, Lawson & Assoc., 64 Woodland Ave., San Raphael for information pertaining to subsurface conditions and recommendations regarding foundation material.

Design soil pressures are 2000 psf, D.L., & 3000 psf, D.L. + L.L.

CONCRETE NOTES

Concrete shall have minimum 28 day compressive strength f'c as follows:

	f'c	Type	Max Size Agg.	Max Slump
U.O.N.	3000psi	HRC	1½	4
Walls	3000p.s.i.	HRC	¾	4

NOTE: Water cement ratio shall be less than 6 gal. per sack.

Reinforcing steel shall be ASTM-A15 Intermediate Grade steel bars with ASTM A-305 deformations.

Unless otherwise noted, all dimensions shown for location of reinforcing steel are to the face of the main bars and denote clear coverage. Concrete coverage shall be as follows:

3" where concrete is deposited directly against ground.
2" where concrete is exposed to ground but placed in forms.
1-½" for bars or mesh in slab on ground, beam and column bars.
1" for T & B slab bars and bars at exterior face of wall.
3/4" for bars at interior face of walls.

Laps and splices shall be 32 bar diameter with 1'-3 minimum. Stagger splices in adjacent bars.

Dowel all (V) and (H) reinforcement in walls, columns, etc. to supporting footings, beams and walls with bars of same size and spacing as bar doweled. Dowels to extend 32 diameters into supporting members and lap 32 diameters with bar doweled.

TYPICAL BENDS & LAPS OF HORIZONTAL WALL & FOOTING REINFORCING AT CORNERS & INTERSECTIONS

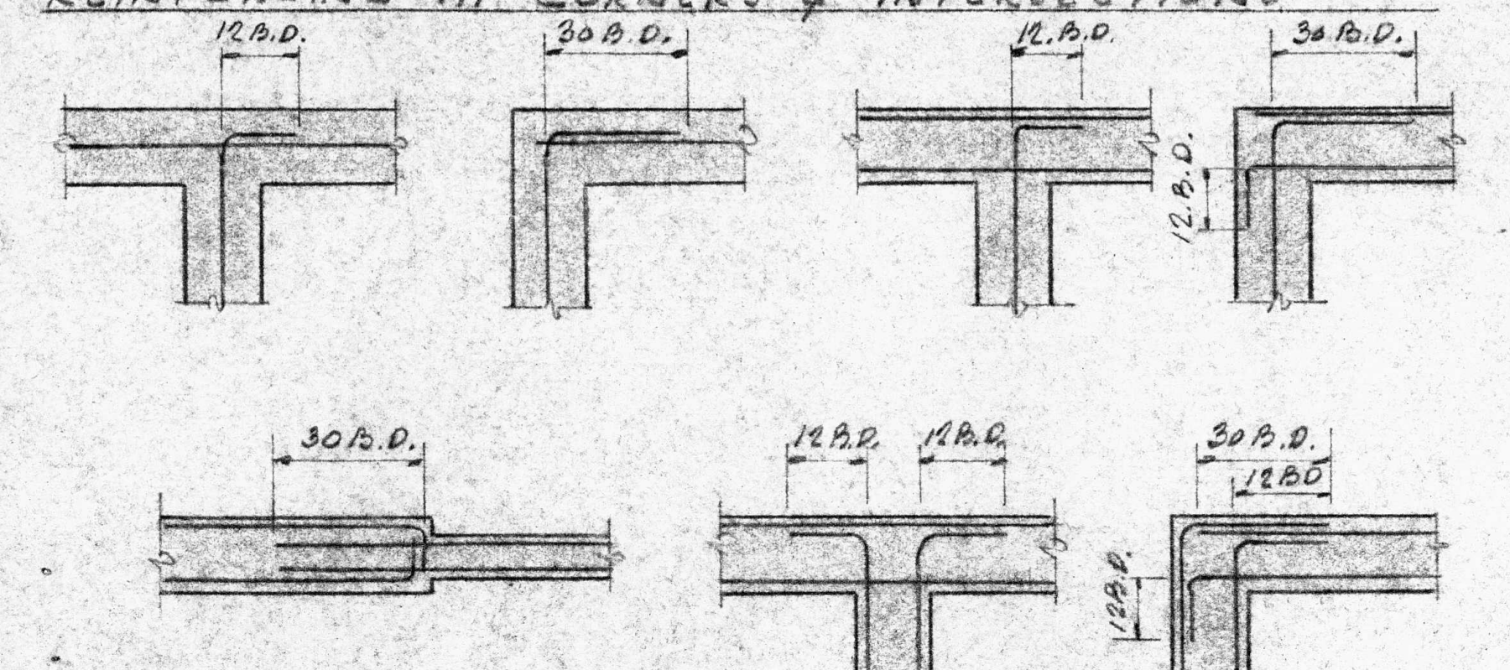
12B.D.
30B.D.
12B.D.
30B.D.
30B.D.
12B.D.
12B.D.
30B.D.
12B.D.

TYPICAL STEPPED FOOTING

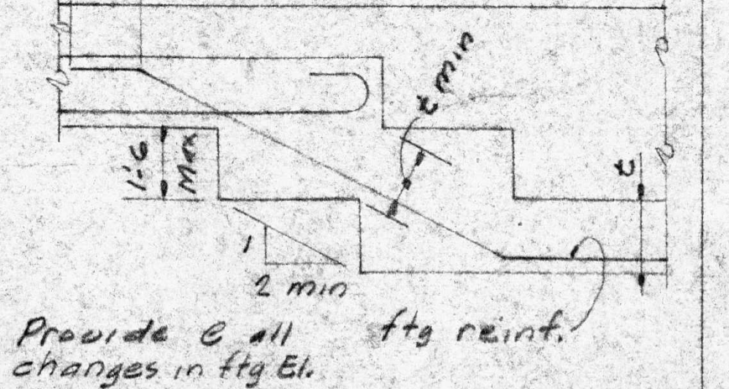
30B.D.
1'-6 Max
2 min
t min
t
1
Provide @ all changes in ftg El.
ftg reinf.

TYPICAL BAR BENDS, OFFSETS & HOOKS

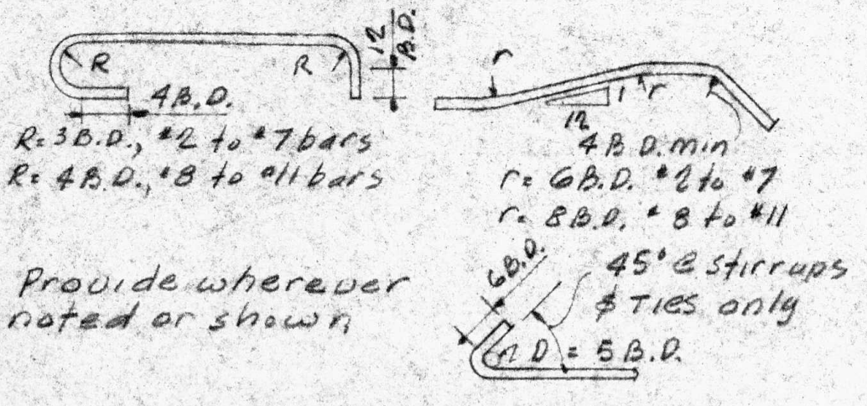
R
R
12 B.D.
4B.D.
R=3B.D., #2 to #7 bars
R=4B.D., #8 to #11 bars
Provide wherever noted or shown
r
r
12
4B.D. min
r=6B.D. #2 to #7
r=8B.D. #8 to #11
6B.D.
45° @ stirrups & TIES only
D=5B.D.

TYPICAL CONSTRUCTION JOINT, C.J., & TYPICAL EXPANSION JOINT, e.j., AT SLAB ON GRADE

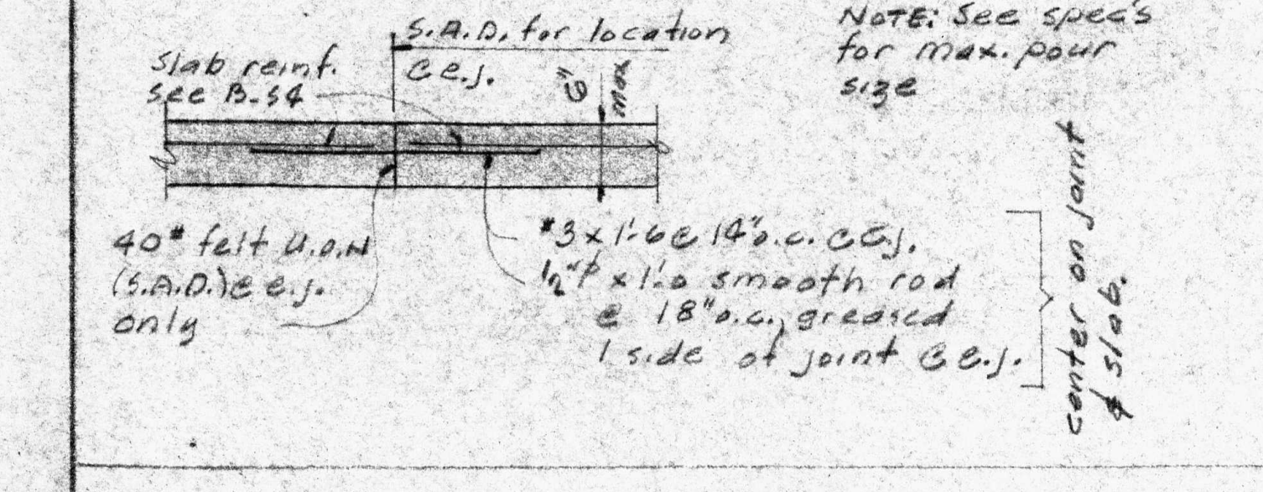
Slab reinf. see B-S4
S.A.D. for location @ e.j.
6" max
40# felt U.O.N (S.A.D.) @ e.j. only
#3 x 1'-6 @ 14"o.c. @ C.J.
½"φ x 1'-0 smooth rod @ 18"o.c. greased 1 side of joint @ e.j.
center on joint & slab.

NOTE: See spec's for max. pour size

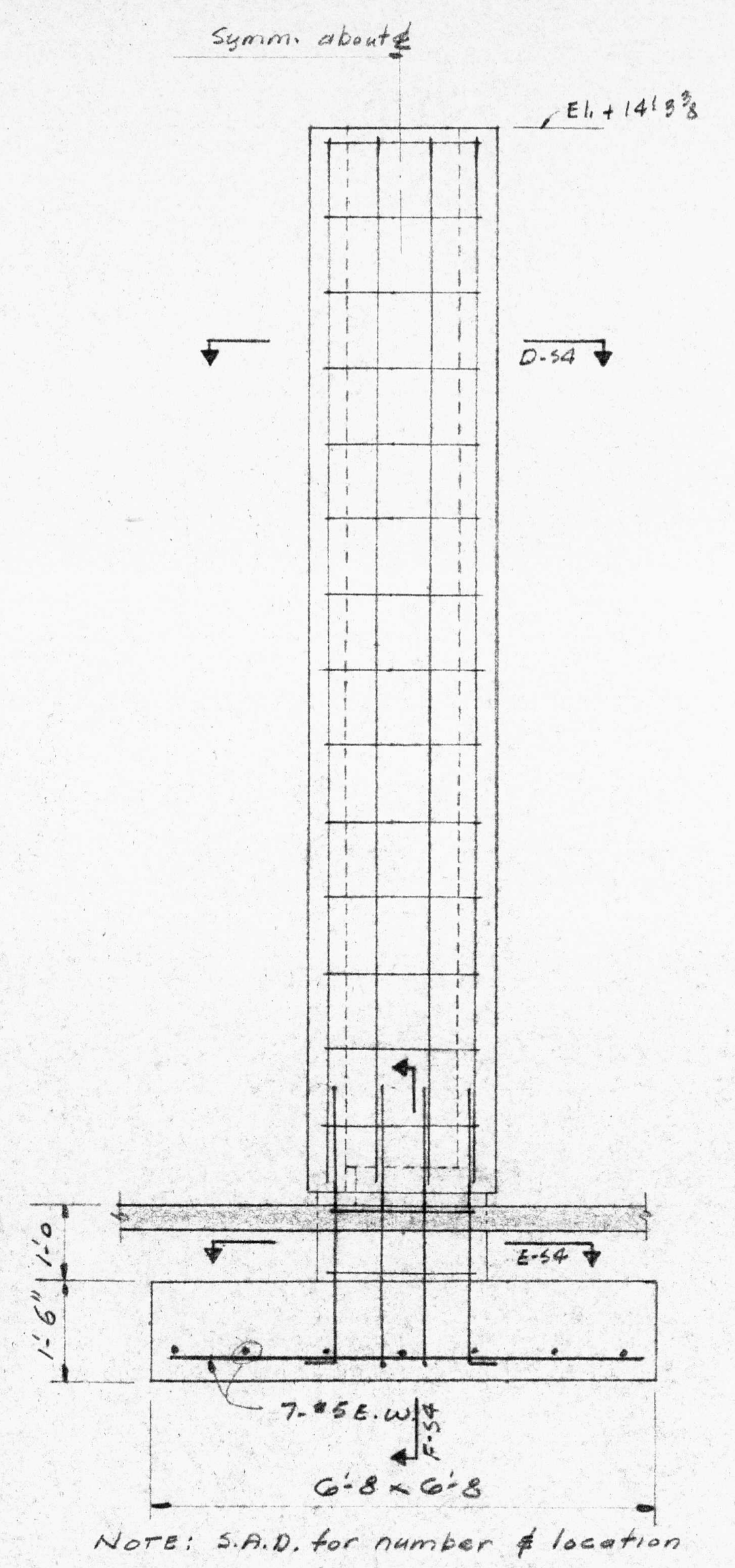
Symm. about ℄
El.+14.15
D-S4
E-S4
7-#6 E.W.
6'-8 x 6'-8
1'-6"
1'-0

Note: S.A.D. for number & location

TYPICAL LIGHT PYLON

H-S4
1/2"=1'-0"

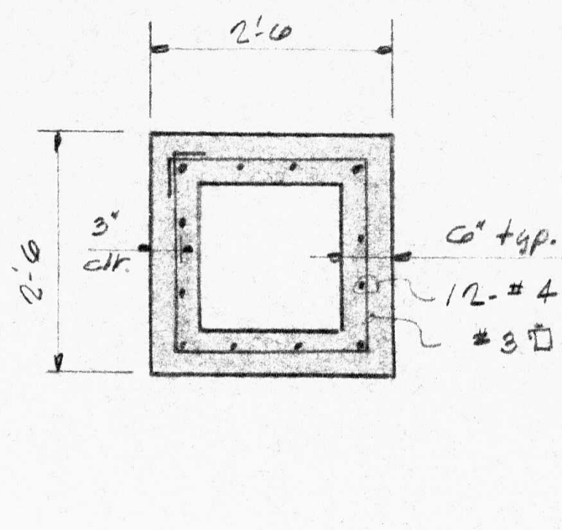
2'-0
3" clr
6" typ.
12-#4
#3 @ 12" o.c.

D-S4
1/2"=1'-0"

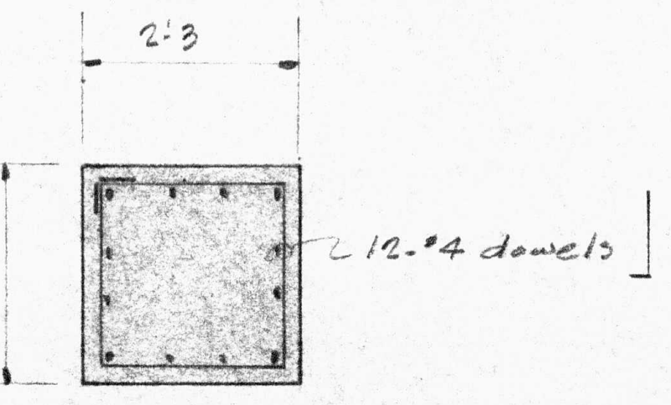
2'-3
12-#4 dowels

E-S4
1/2"=1'-0"

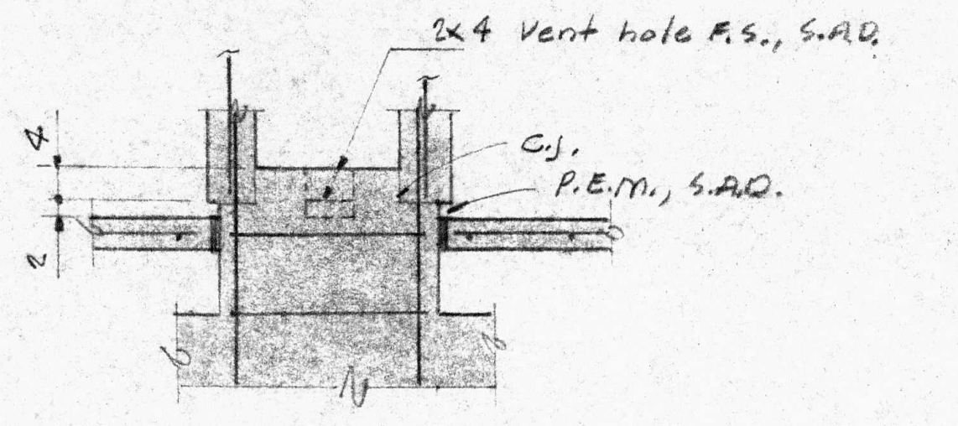
3x4 Vent hole F.S., S.A.D.
C.J.
P.E.M., S.A.D.

F-S4
1/2"=1'-0"

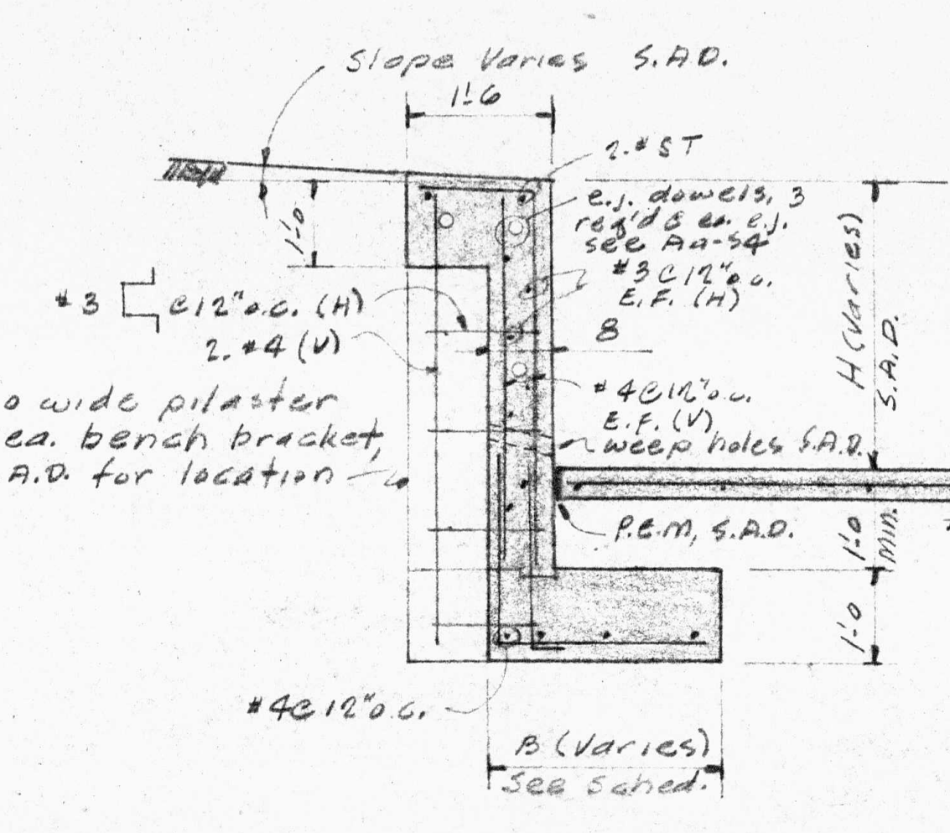
Slope Varies S.A.D.
1'-6
#3 @ 12" o.c. (H)
2-#4 (V)
1'-0 wide pilaster @ ea. bench bracket, S.A.D. for location
P.E.M., S.A.D.
#4 @ 18" o.c.
B (Varies) See Sched.

C-S4
1/2"=1'-0"

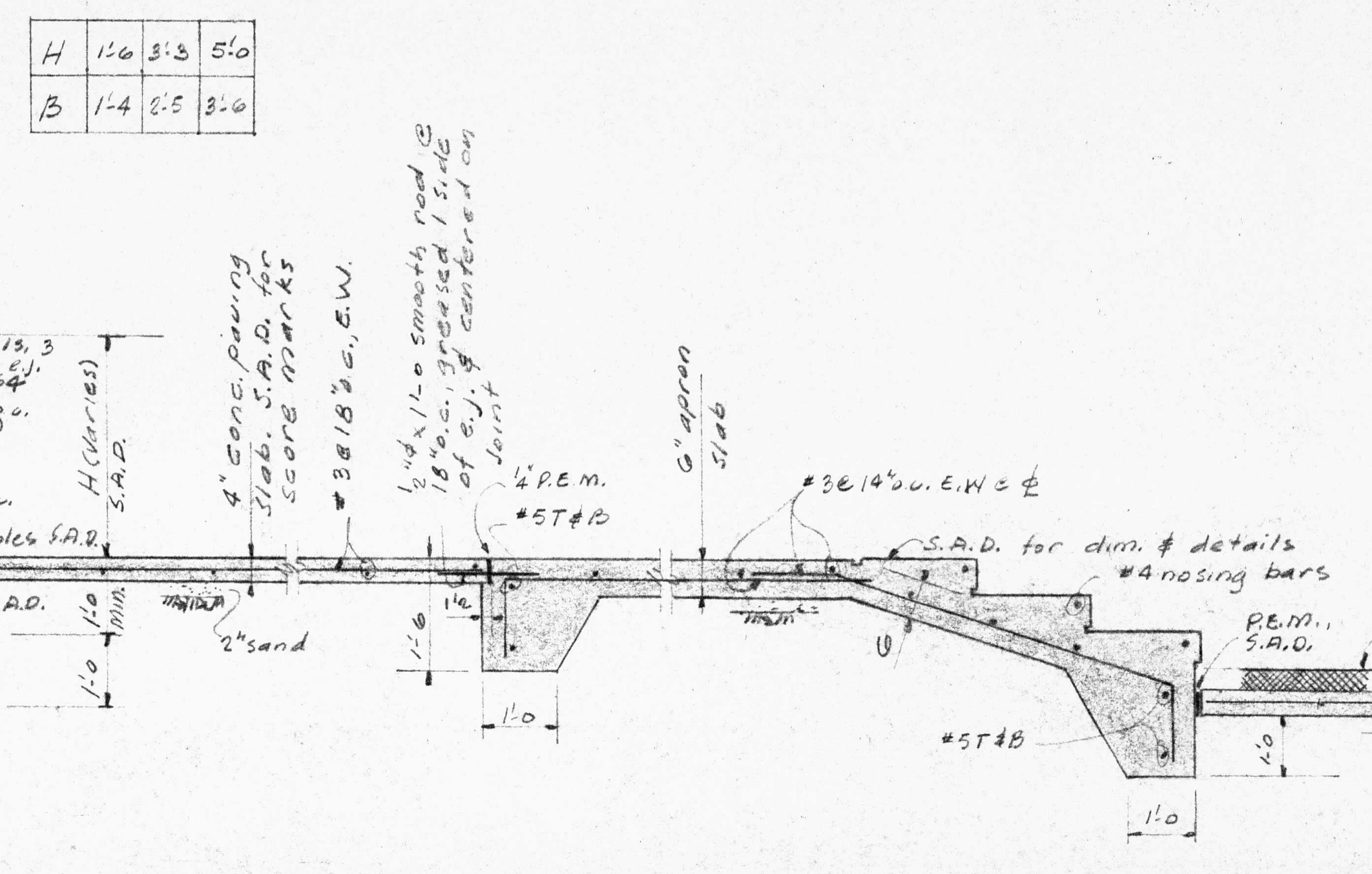
H 1-6 3-3 5-0
B 1-4 2-5 3-6
4" conc. paving S.A.D.
2" sand
#3 @ 18" o.c. E.W.
Weep holes S.A.D.
P.E.M.
#5 T&B
#3 @ 14" o.c. E.W. @ ℄
S.A.D. for dim. & details
#4 nosing bars

B-S4
1/2"=1'-0"

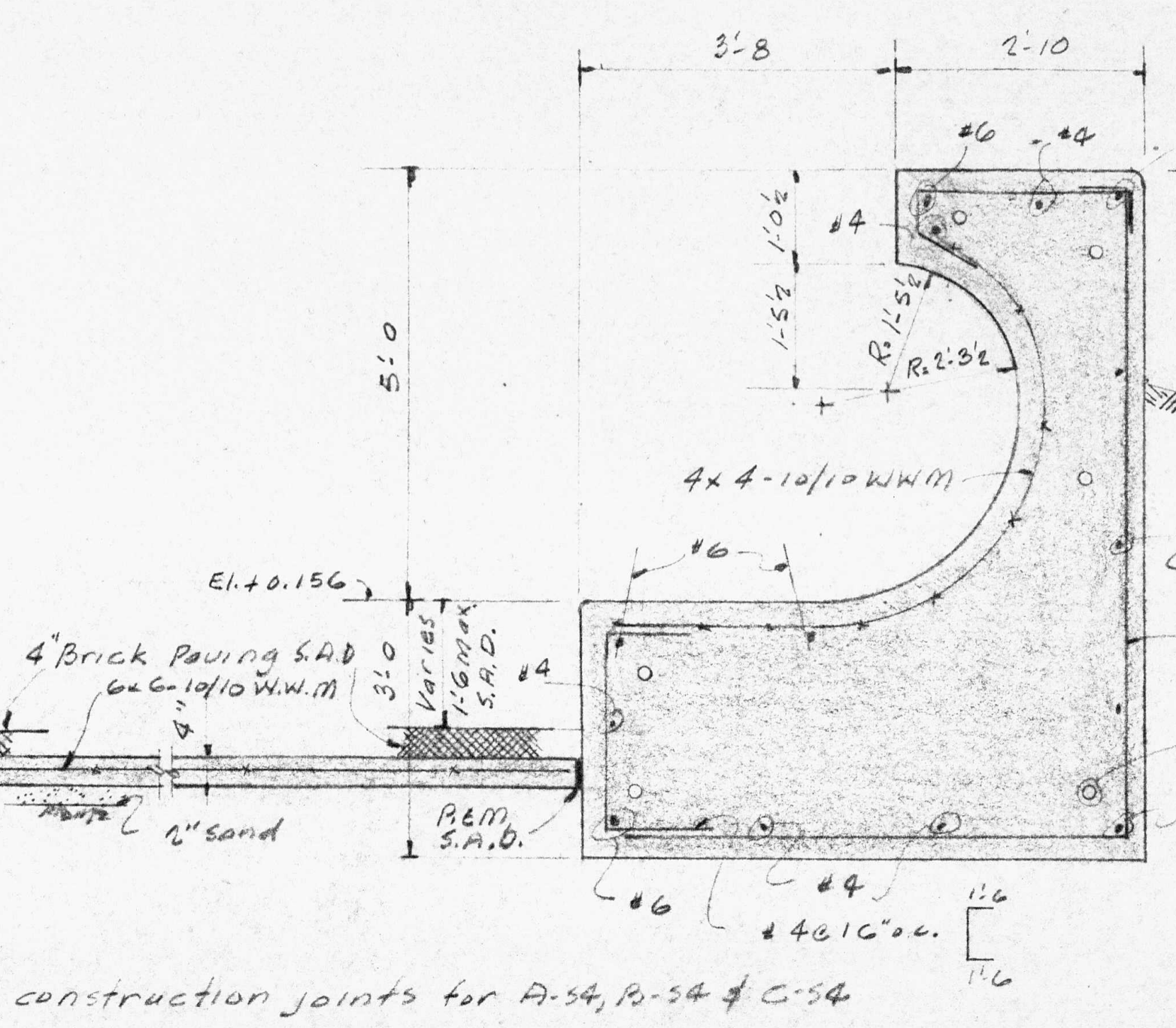
3'-8
2'-10
#6
#4
El. Varies S.A.D.
4x4-10/10 W.W.M.
4" Brick Paving S.A.D.
2" sand
P.E.M. S.A.D.
El.+0.156
2-#4 @ 16" o.c.
#6
16 oz. copper tube, swage ends, running fit.
C.J.-#4 @ 3'-0 E.W.
Expansion joint dowels 6 req'd @ ea. e.j. See Aa-S4

NOTE: S.A.D. & spec's for location, extent etc. of expansion & construction joints for A-S4, B-S4 & C-S4

A-S4
1/2"=1'-0"

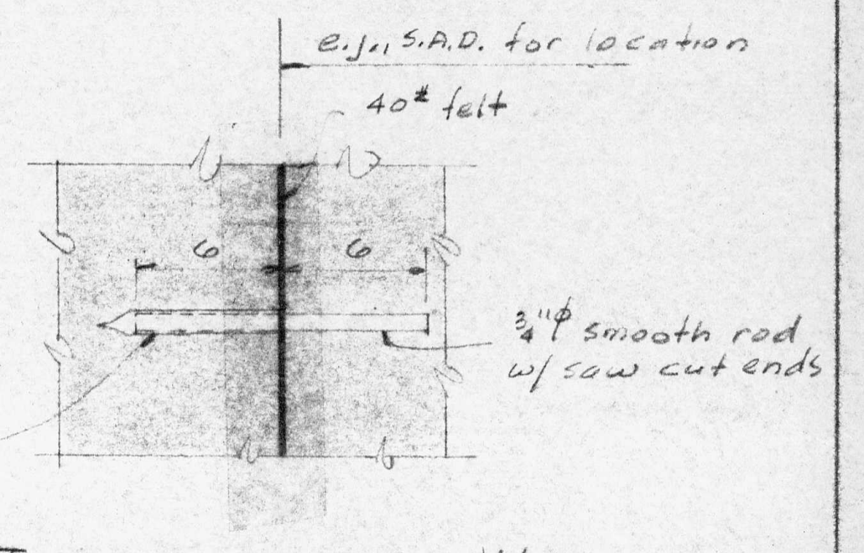
e.j., S.A.D. for location
40# felt
¾"φ smooth rod w/ saw cut ends

TYPICAL e.j. AT WALL

Aa-S4

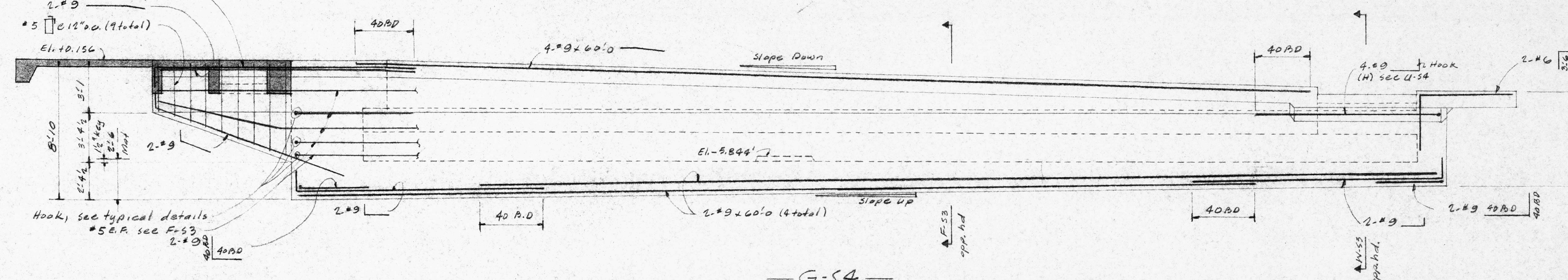
2-#9
#5 @ 12" o.c. (4 total)
El.+0.156
40B.D.
4-#9 x 60'-0
Slope Down
El.-5.844'
2-#9
Hook, see typical details
#5 E.F. see F-S3
2-#9 x 60'-0 (4 total)
Slope up
40B.D.
2-#9
2-#9 40B.D.
2-#6
El.-1.944'
F-S3 opp. hd.
M-S3 opp. hd.

G-S4
1/4"=1'-0"

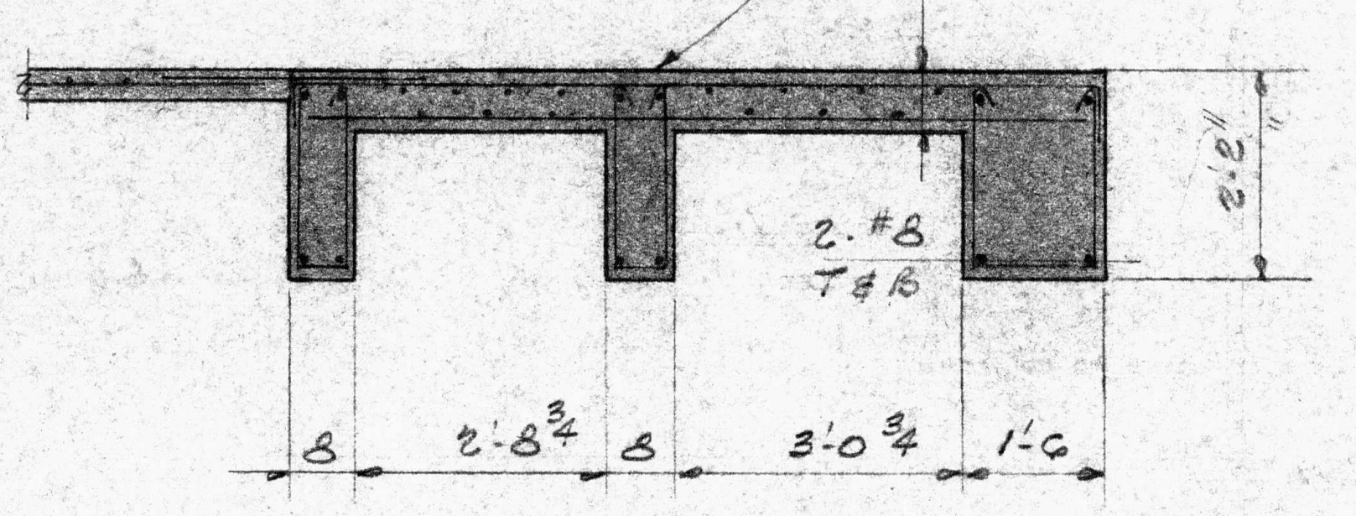
See G-S3 U.O.N
2-#8 T&B
8
2'-8¾
8
3'-0¾
1'-6
2'-8½

J-S4

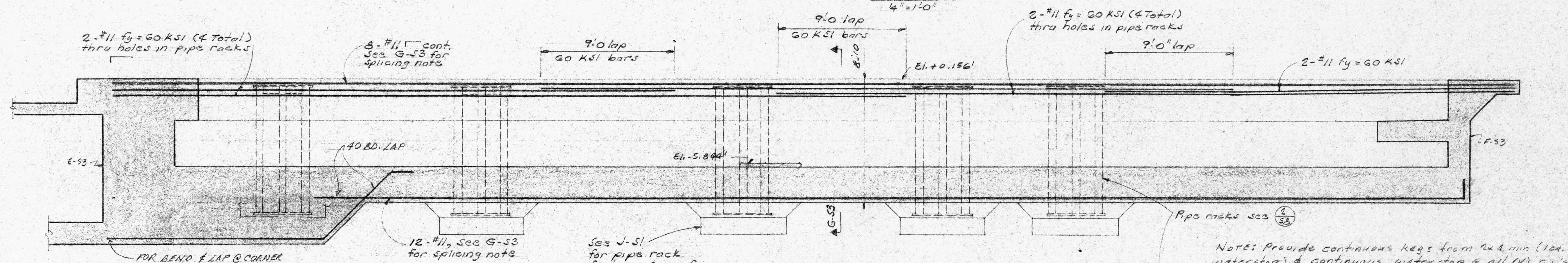
2-#11 fy=60KSI (4 Total) thru holes in pipe racks
8-#11 cont. See G-S3 for splicing note
9'-0 lap 60 KSI bars
9'-0 lap 60 KSI bars
El.+0.156
2-#11 fy=60KSI (4 Total) thru holes in pipe racks
9'-0 lap
2-#11 fy=60 KSI
E-S3
40 B.D. LAP
El.-5.844
G-S3
F-S3
FOR BEND & LAP @ CORNER SEE Q-S4
12-#11, See G-S3 for splicing note
See J-S1 for pipe rack footings & reinf.
Pipe racks see

Note: Provide continuous keys from 2x4 min (1ea. side waterstop) & continuous water stop @ all (V) c.j.'s in G-S4, L-S4, Q-S4 & U-S4

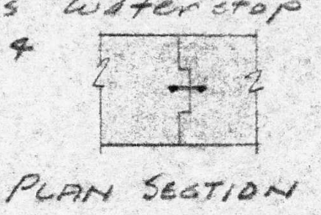

PLAN SECTION

L-S4
1/4"=1'-0"

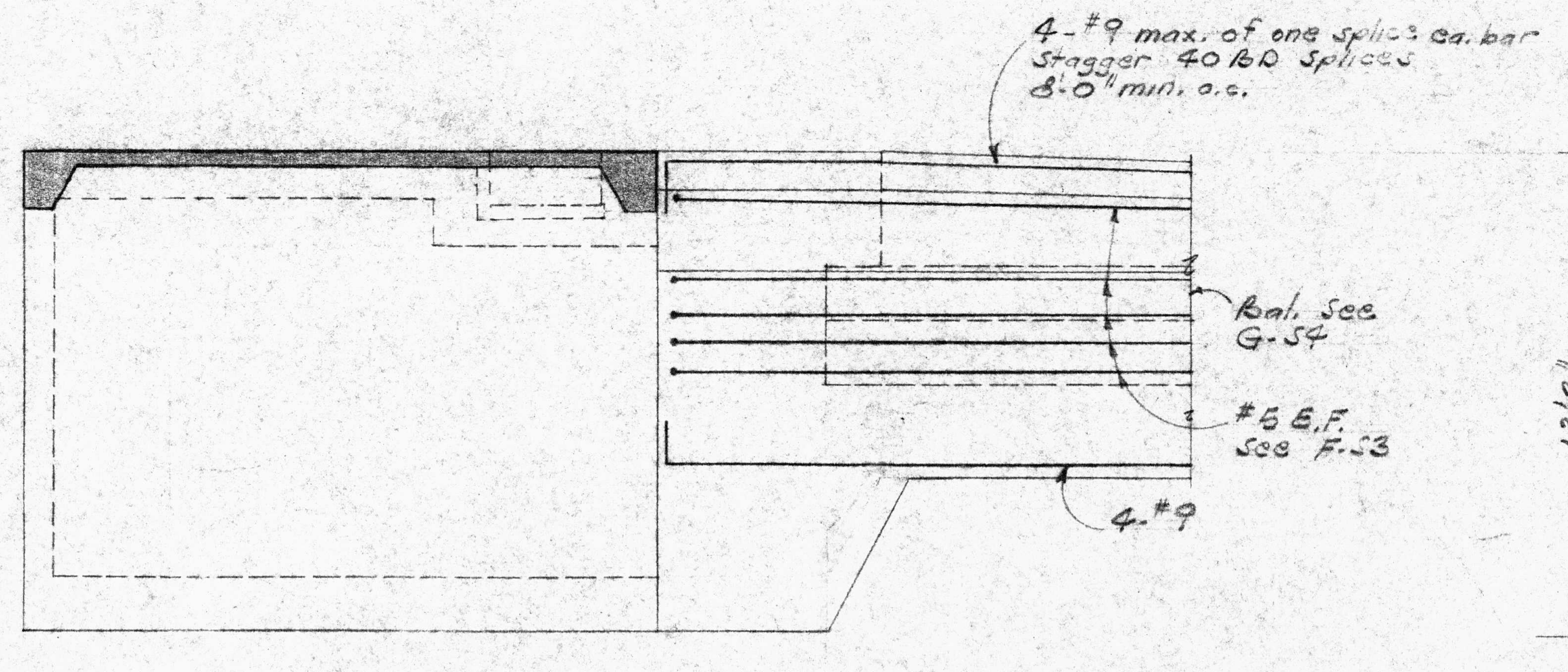
4-#9 max. of one splice ea. bar Stagger 40B.D. Splices 8'-0 min. o.c.
Reinf. See G-S4
#6 E.F. See F-S3
4-#9
13'-2
8'-10
2'-4

M-S4

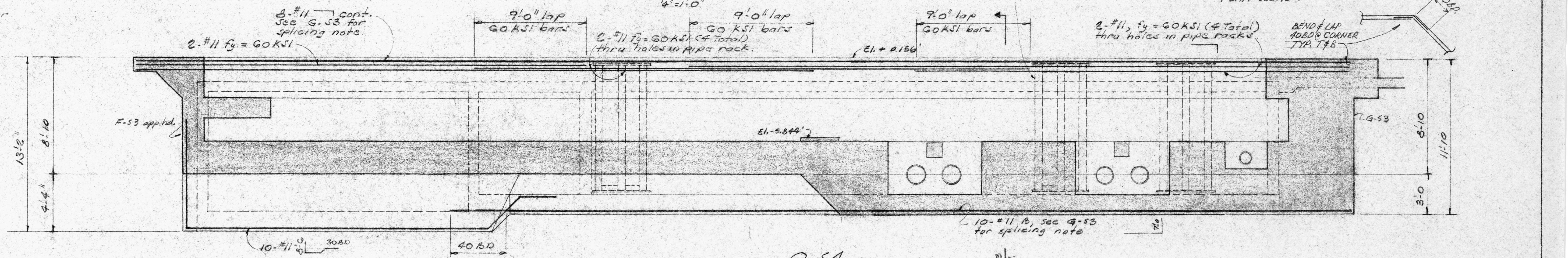
2-#11 fy=60KSI
8-#11 cont. See G-S3 for splicing note
9'-0 lap 60KSI bars
2-#11 fy=60KSI (4 Total) thru holes in pipe rack.
9'-0 lap 60KSI bars
El.+0.156
9'-0 lap 60KSI bars
2-#11, fy=60KSI (4 Total) thru holes in pipe racks
BEND & LAP 40B.D. @ CORNER TYP. T&B
F-S3 opp. hd.
El.-5.844
G-S3
10-#11 30B.D.
40 B.D.
10-#11 B, see G-S3 for splicing note
8'-10
11'-10
3'-0
F-S3 opp. hd.

Q-S4
1/4"=1'-0"

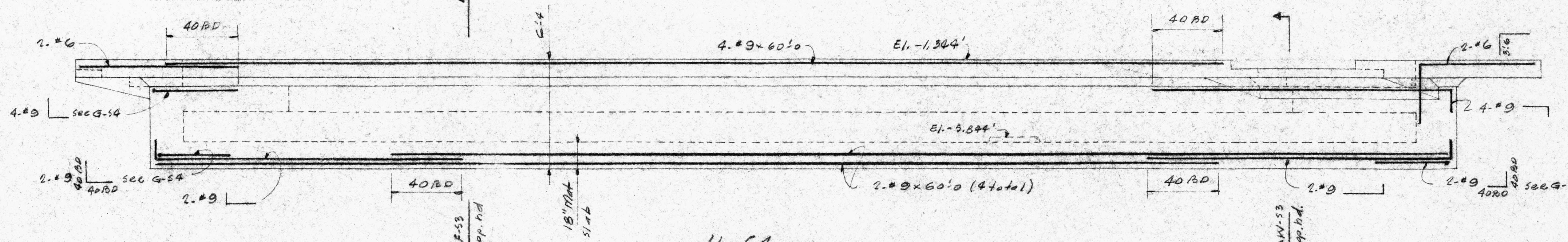
2-#6
40B.D.
4-#9 x 60'-0
El.-1.944'
40B.D.
2-#6
4-#9 See G-S4
El.-5.844
4-#9
2-#9 40B.D. See G-S4
40B.D.
18" Max
2-#9 x 60'-0 (4 total)
40B.D.
2-#9
2-#9 40B.D. See G-S4
F-S3 opp. hd.
M-S3 opp. hd.

U-S4
1/4"=1'-0"

EMBARCADERO PLAZA
EMBARCADERO LOWER MARKET APPROVED REDEVELOPMENT PROJECT AREA E1

SCALE: As Noted
DATE: JAN. 25, 1969
DRAWN BY: R.S.

POOL & PLAZA SECTIONS

Roger Sayin
S 1276

SAN FRANCISCO REDEVELOPMENT AGENCY IN COOPERATION
WITH THE SAN FRANCISCO RECREATION AND PARK DEPARTMENT
AND SAN FRANCISCO DEPARTMENT OF PUBLIC WORKS

JOINT VENTURE ARCHITECTS:
LAWRENCE HALPRIN & ASSOCIATES
JOHN S. BOLLES ASSOCIATES
MARIO J. CIAMPI & ASSOCIATES

S4

SHEET S4 OF 4

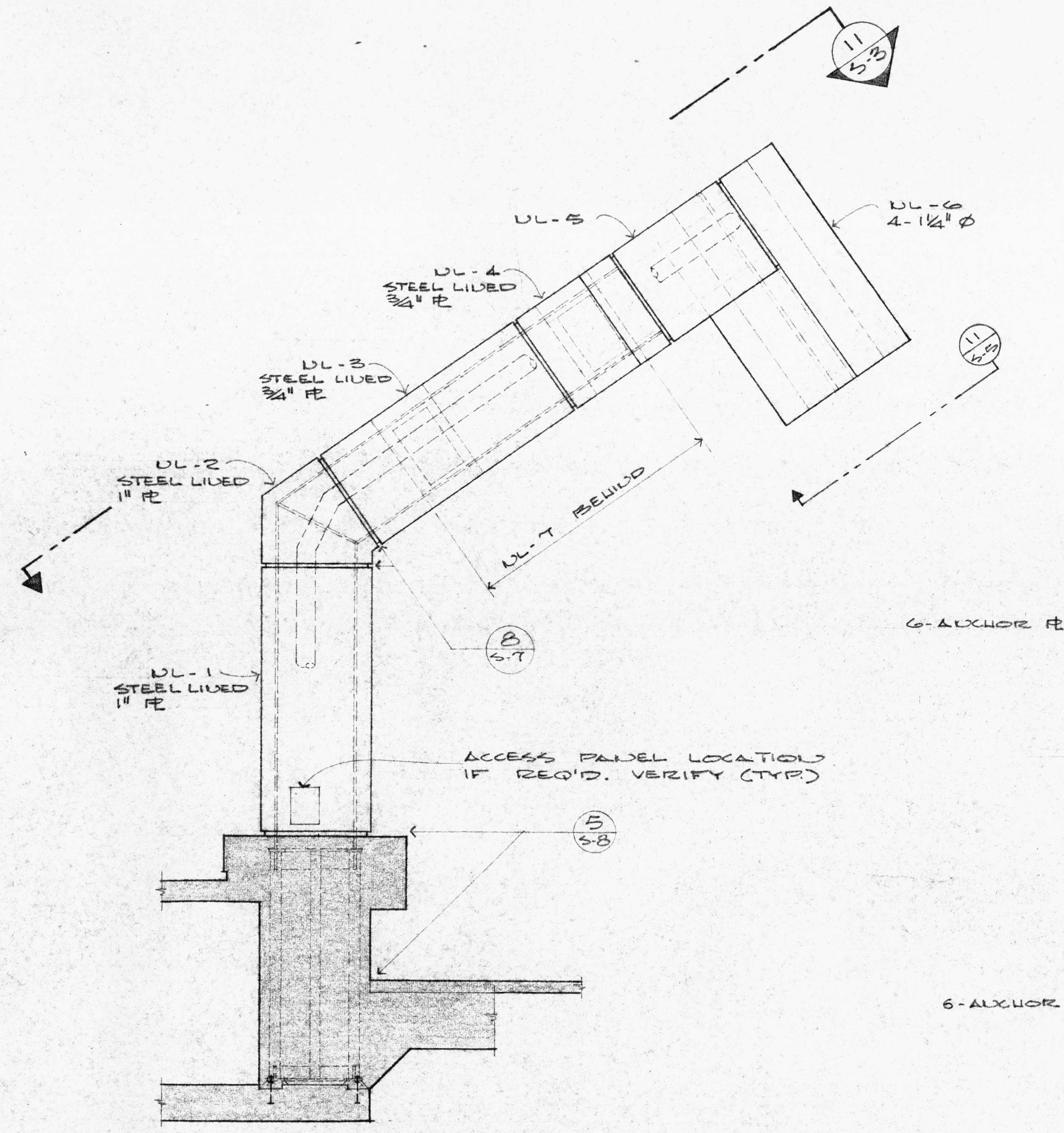
NL-6
4-1¼"Ø
NL-5
NL-4
STEEL LINED
¾" PL
NL-3
STEEL LINED
¾" PL
NL-2
STEEL LINED
1" PL
NL-7 BEHIND
NL-1
STEEL LINED
1" PL
ACCESS PANEL LOCATION
IF REQ'D. VERIFY (TYP)

1/S-3 STRUCTURE NL - ELEVATION
¼" = 1' - 0"

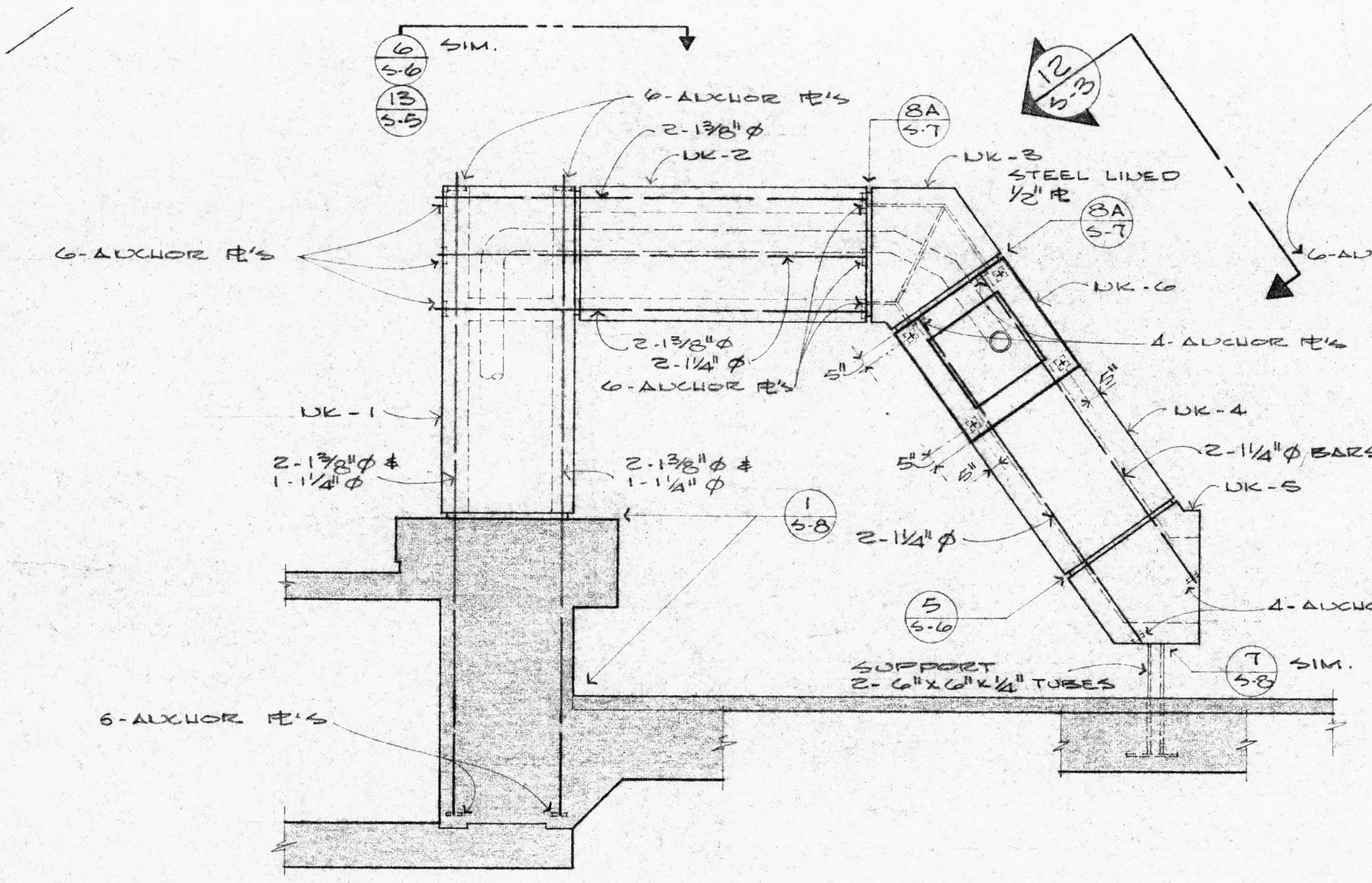
6-ANCHOR PL'S
NK-2
NK-3
STEEL LINED
½" PL
NK-6
4-ANCHOR PL'S
NK-4
2-1¼"Ø BARS
NK-5
NK-1
SUPPORT
2-6"x6"x½" TUBES
6-ANCHOR PL'S

2/S-3 STRUCTURE NK - ELEVATION
¼" = 1' - 0"

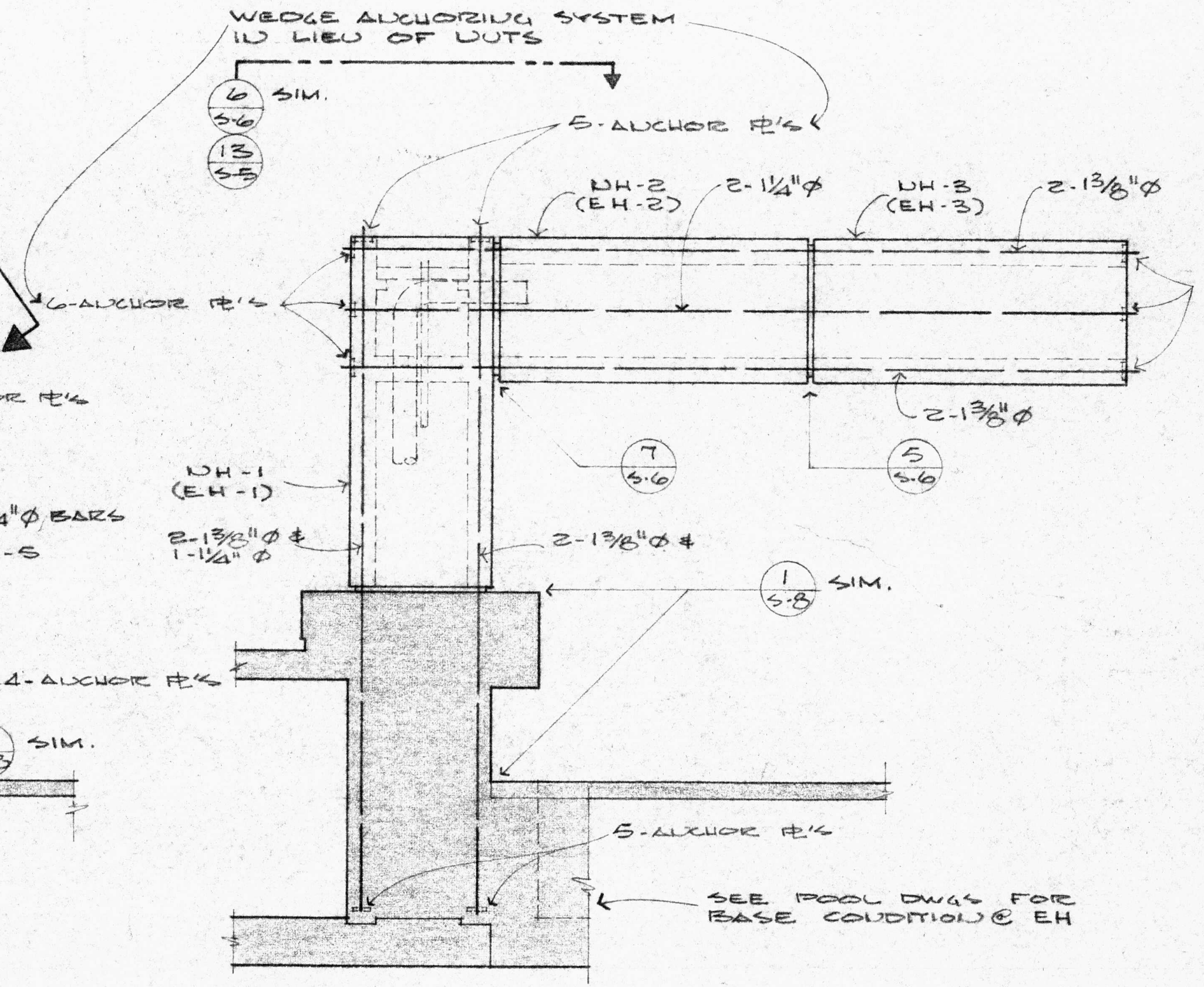
WEDGE ANCHORING SYSTEM
IN LIEU OF NUTS
6-ANCHOR PL'S
NH-2
(EH-2)
NH-3
(EH-3)
NH-1
(EH-1)
SEE POOL DWGS FOR
BASE CONDITION @ EH

3/S-3 STRUCTURE NH & EH - ELEV.
¼" = 1' - 0"

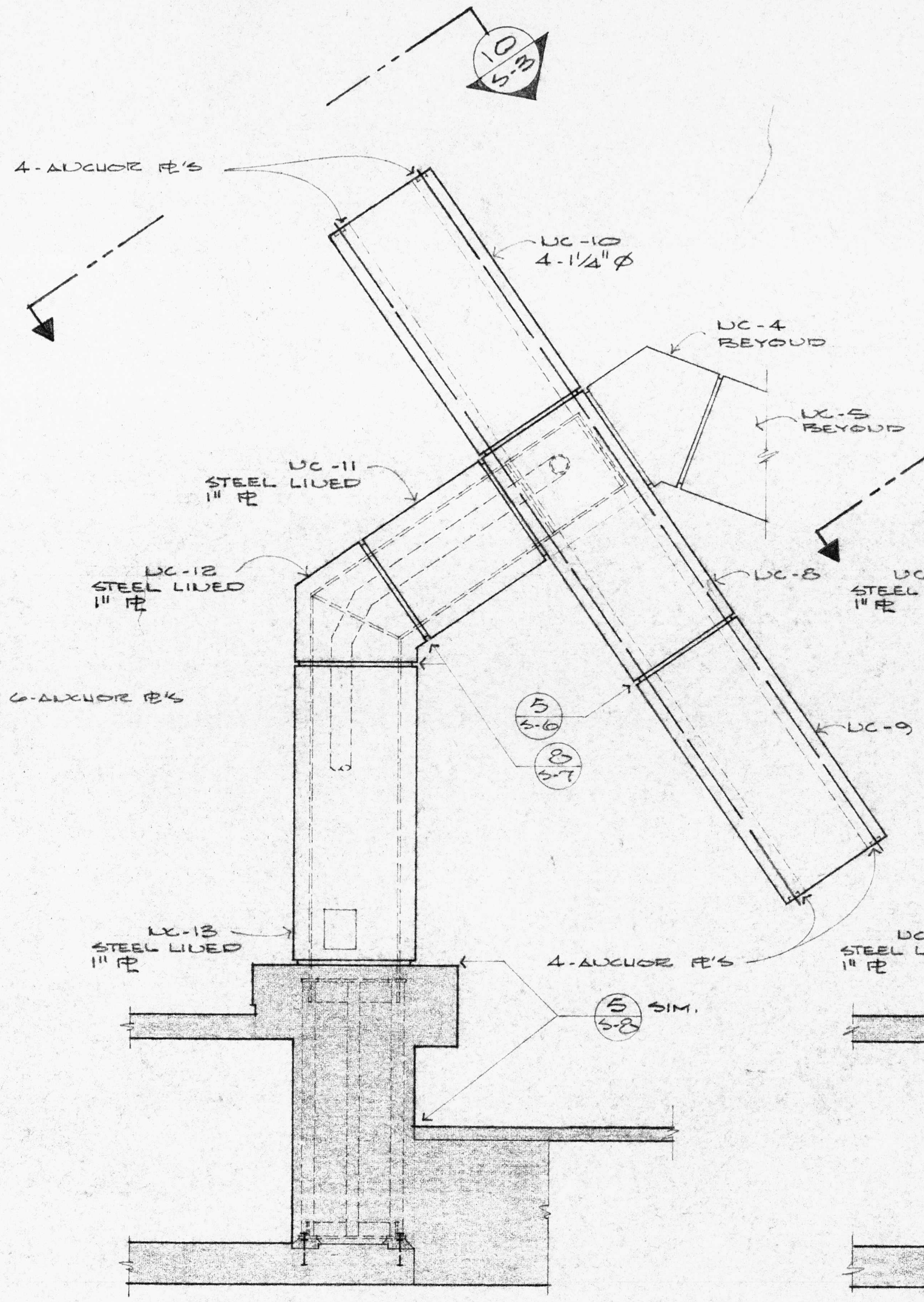
4-ANCHOR PL'S
NC-10
4-1¼"Ø
NC-4
BEYOND
NC-5
BEYOND
NC-11
STEEL LINED
1" PL
NC-12
STEEL LINED
1" PL
NC-8
NC-9
NC-13
STEEL LINED
1" PL
4-ANCHOR PL'S

4/S-3 STRUCTURE NC - ELEV.
¼" = 1' - 0"

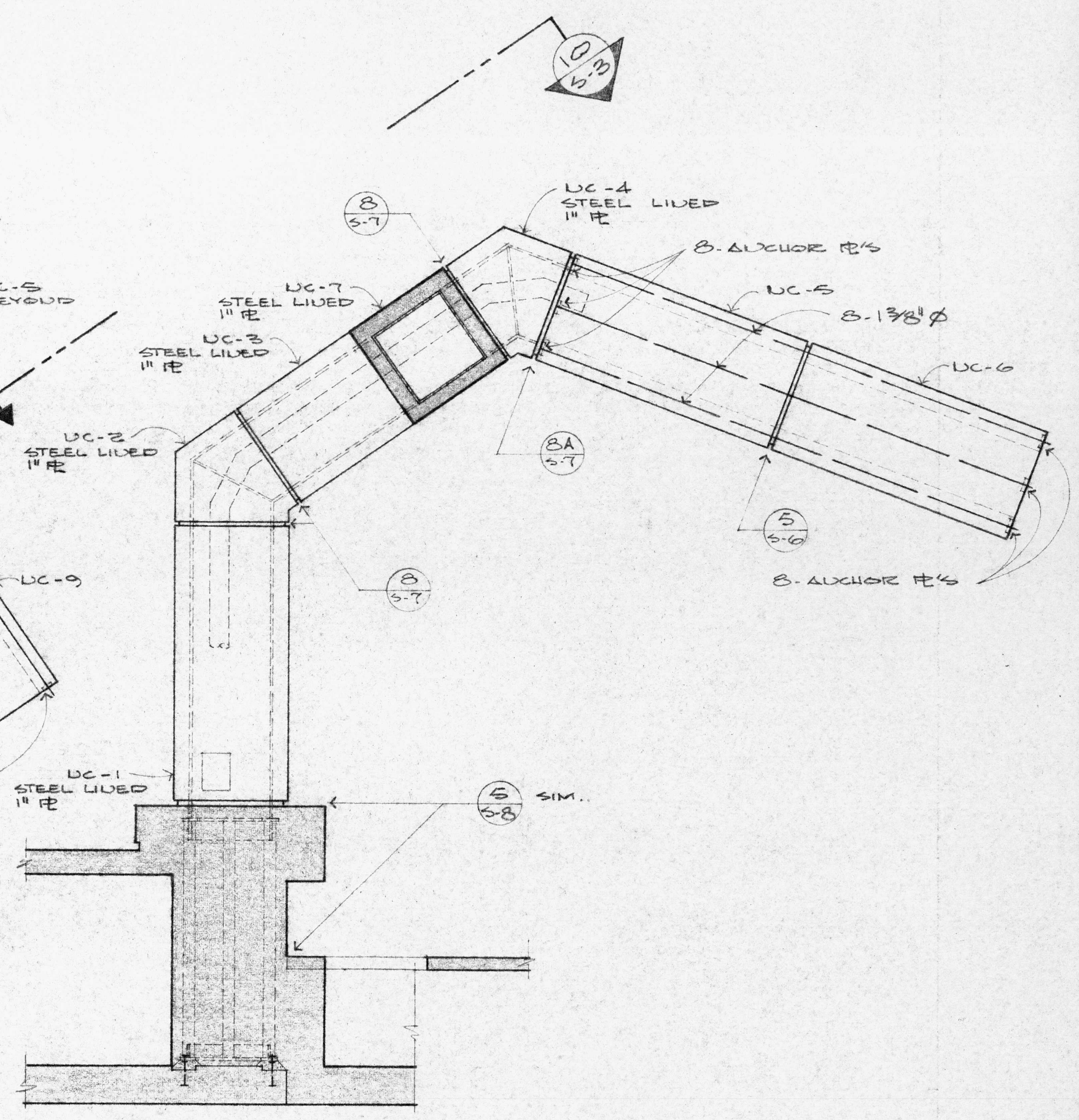
NC-4
STEEL LINED
1" PL
8-ANCHOR PL'S
NC-7
STEEL LINED
1" PL
NC-3
STEEL LINED
1" PL
NC-5
8-1⅜"Ø
NC-6
NC-2
STEEL LINED
1" PL
NC-1
STEEL LINED
1" PL
8-ANCHOR PL'S

5/S-3 STRUCTURE NC - SEC.-ELEV.
¼" = 1' - 0"

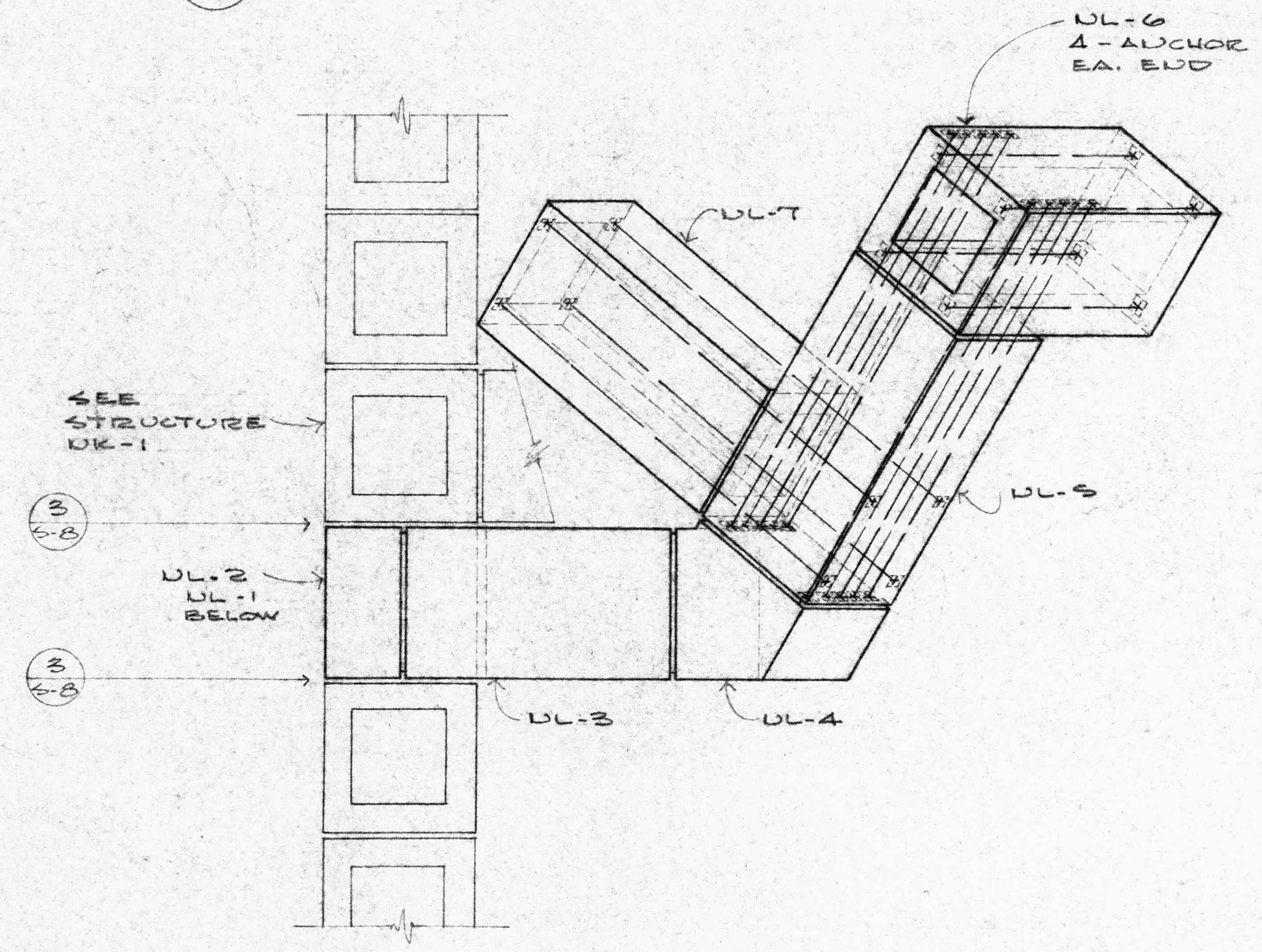
NL-6
4-ANCHOR PL'S
EA. END
NL-7
SEE
STRUCTURE
NK-1
NL-2
NL-1
BELOW
NL-5
NL-3
NL-4

6/S-3 STRUCTURE NL - PLAN
¼" = 1' - 0"

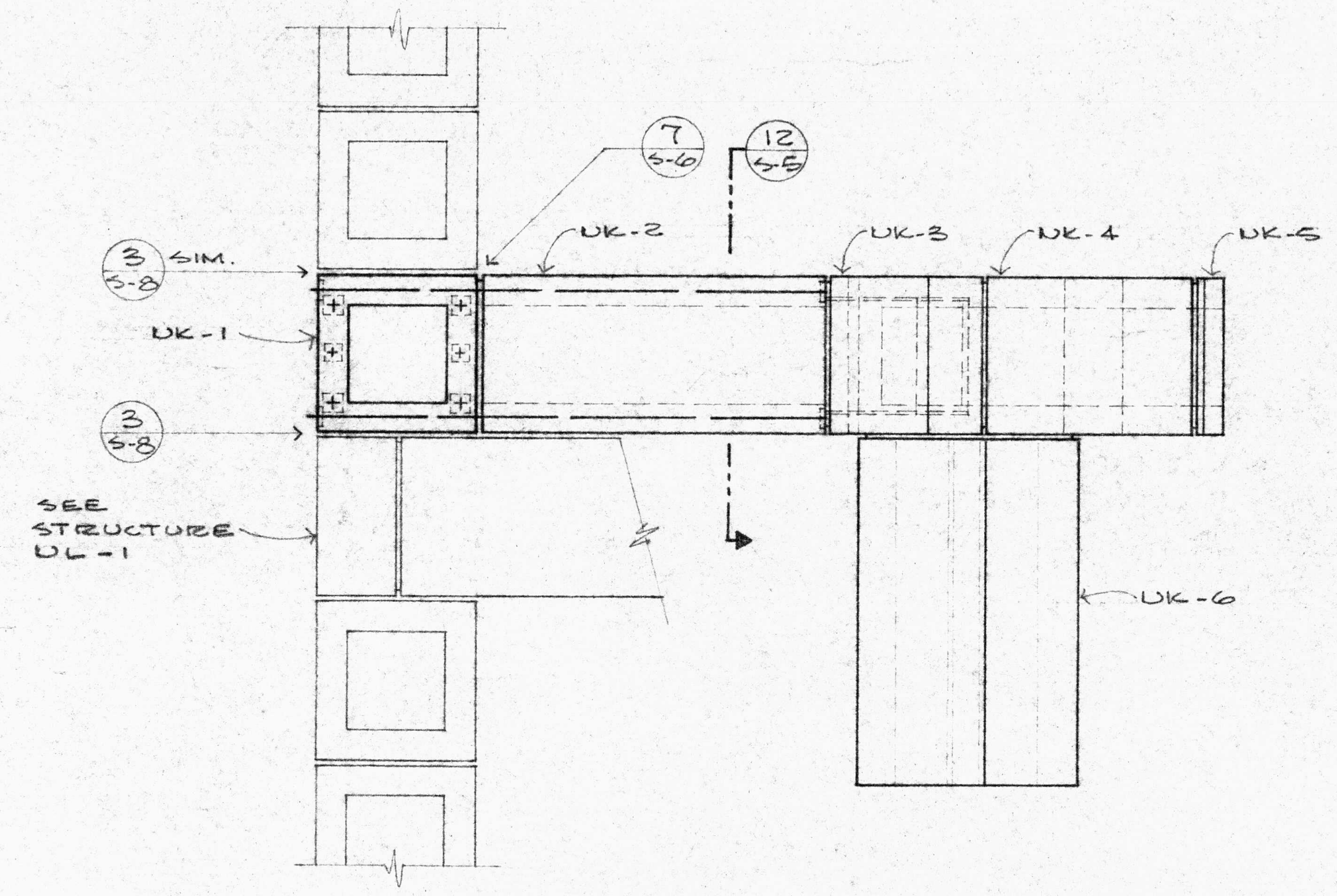
NK-2
NK-3
NK-4
NK-5
NK-1
SEE
STRUCTURE
NL-1
NK-6

7/S-3 STRUCTURE NK - PLAN
¼" = 1' - 0"

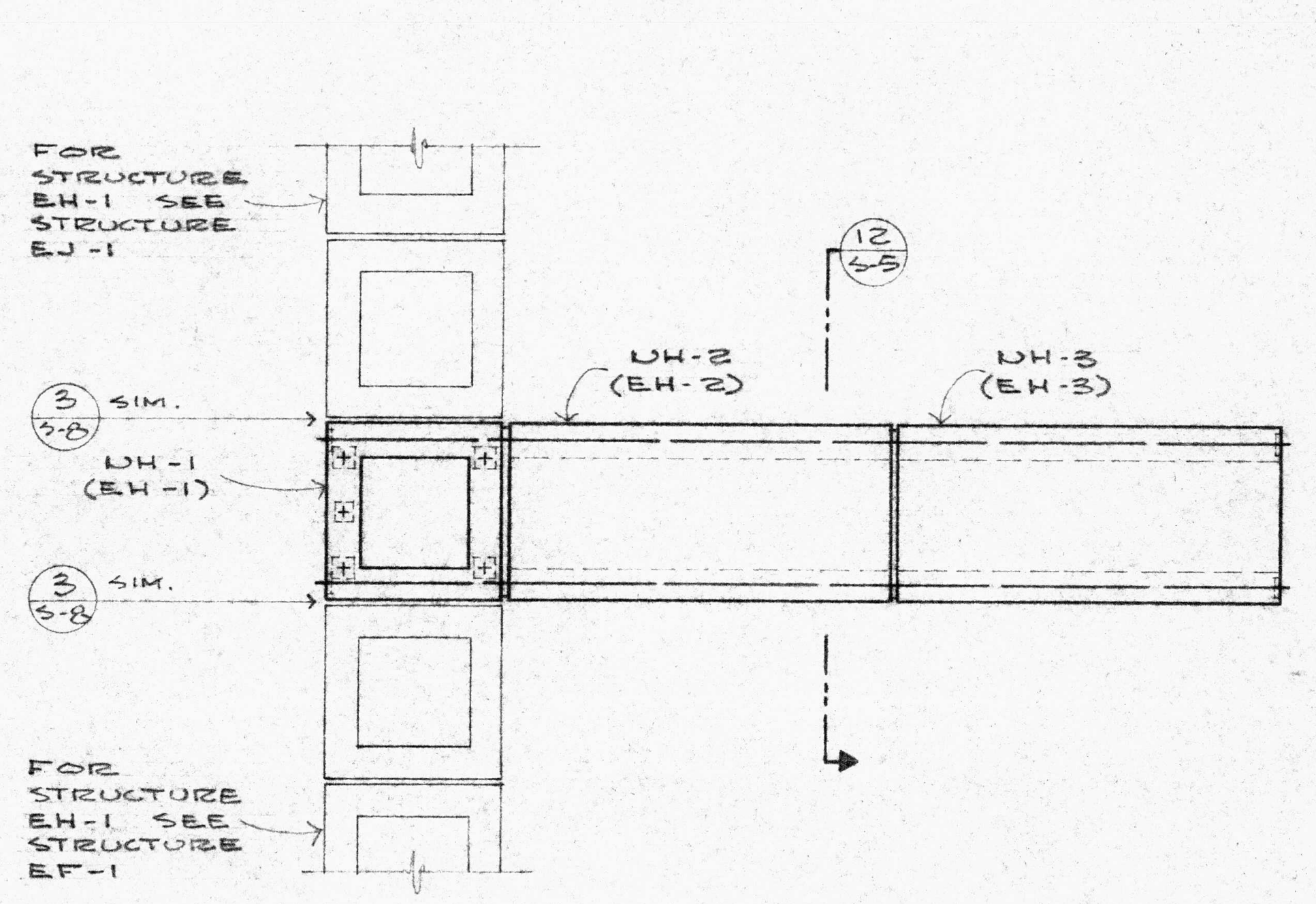
FOR
STRUCTURE
EJ-1 SEE
STRUCTURE
EJ-1
NH-2
(EH-2)
NH-3
(EH-3)
NH-1
(EH-1)
FOR
STRUCTURE
EH-1 SEE
STRUCTURE
EF-1

8/S-3 STRUCTURE NH & EH - PLAN
¼" = 1' - 0"

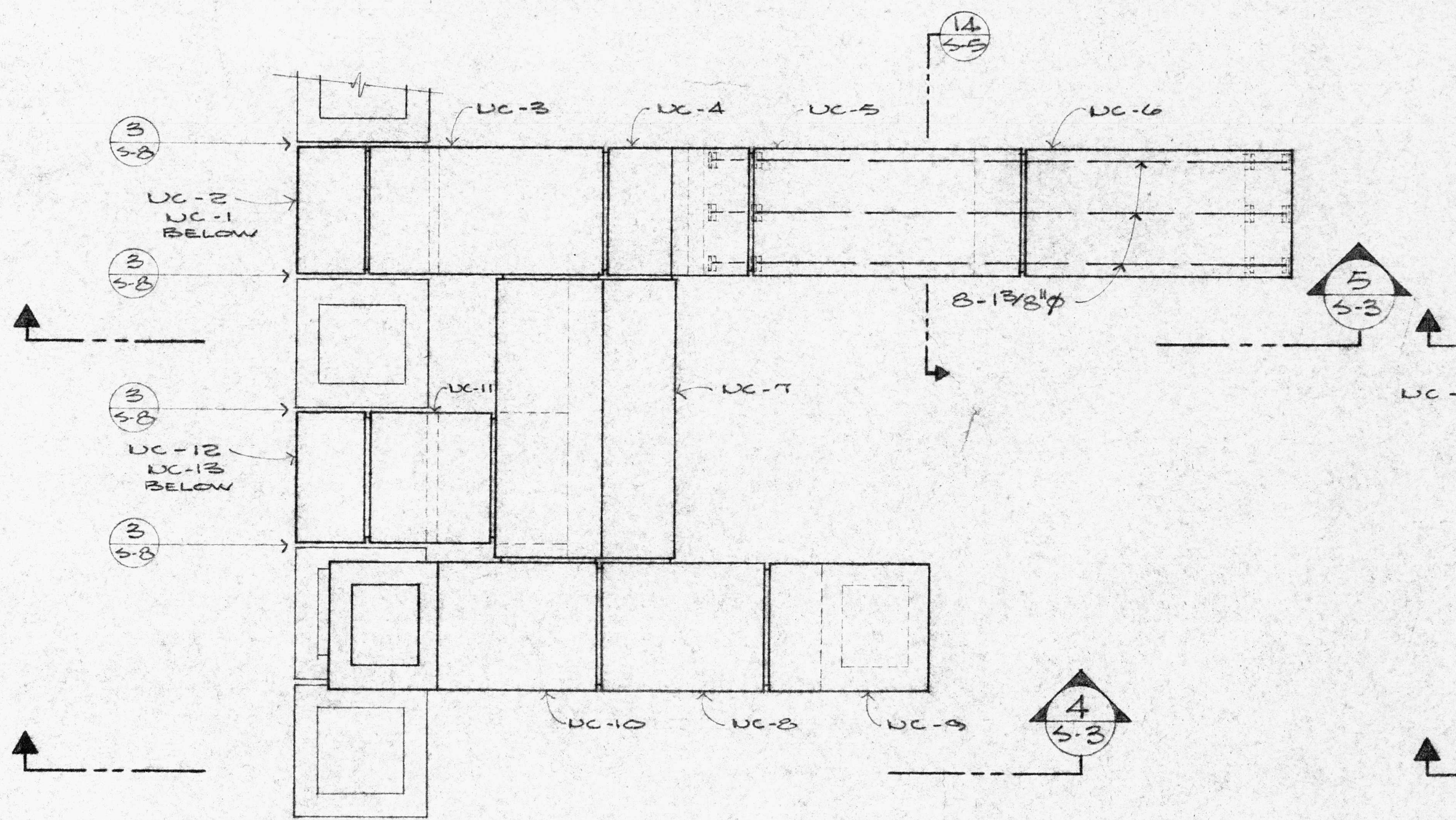
NC-3
NC-4
NC-5
NC-6
NC-2
NC-1
BELOW
NC-7
8-1⅜"Ø
NC-11
NC-12
NC-13
BELOW
NC-10
NC-8
NC-9

9/S-3 STRUCTURE NC - PLAN
¼" = 1' - 0"

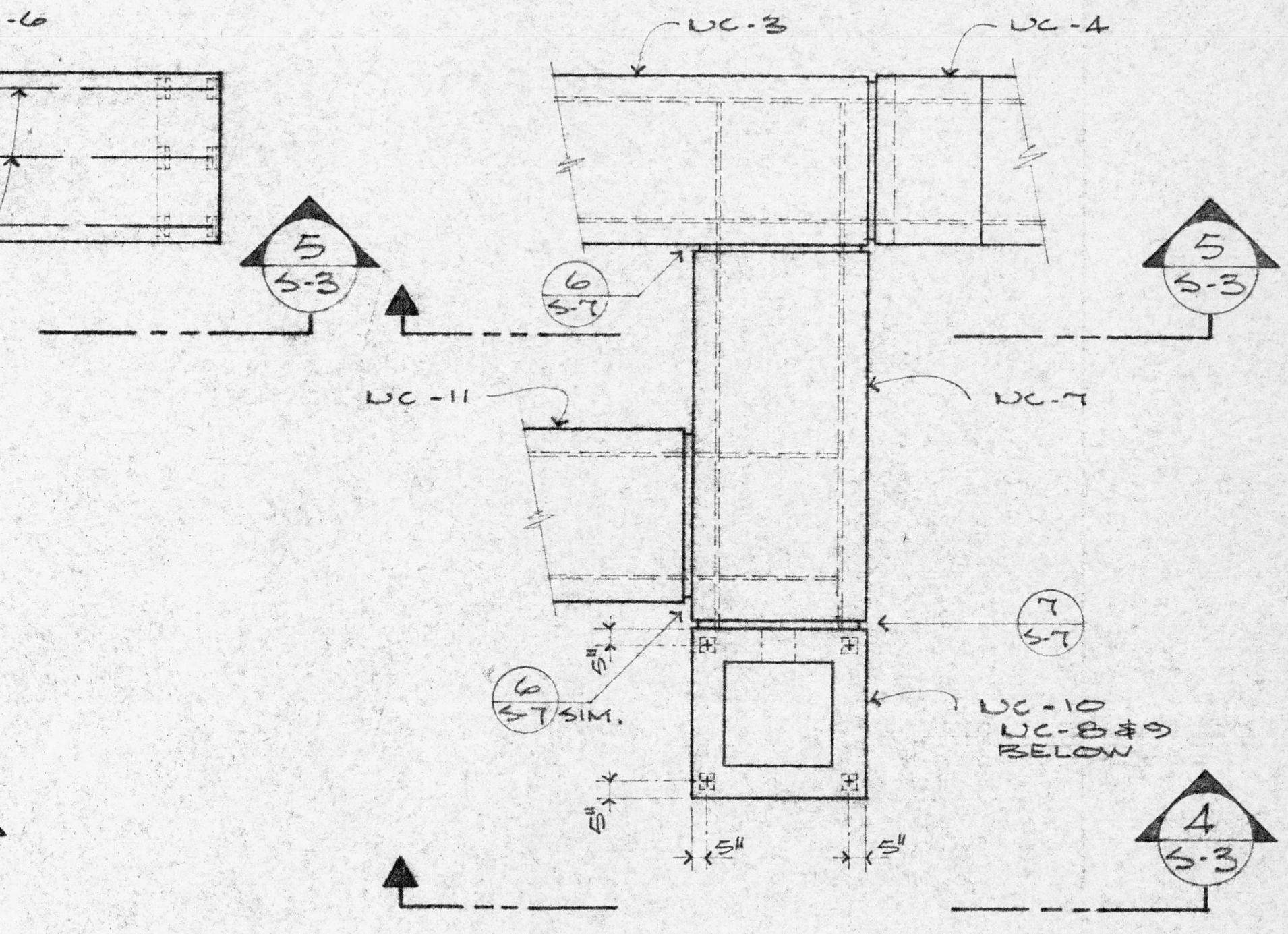
NC-3
NC-4
NC-11
NC-7
NC-10
NC-8 & 9
BELOW

10/S-3 ¼" = 1' - 0"

NOTES:

1. ALL BARS SHOWN ARE SPECIAL STRESSTEEL BARS (ULT. STRENGTH 160 KSI MIN.)
2. SEE SCHEDULE ON SHEET S-6 FOR ANCHOR PL SIZES, ETC.
3. GENERAL CONTRACTOR SHALL COORDINATE NUMBER AND LOCATIONS OF ALL ACCESS OPENINGS, ETC. REQUIRED FOR ERECTION AND INSTALLATION OF WATER LINES AND ELECTRICAL CONDUITS. IT WILL BE PERMISSABLE TO LEAVE OUT STIFFENER PLATE PANELS DURING ERECTION SUBJECT TO PRIOR APPROVAL OF ARCHITECT.

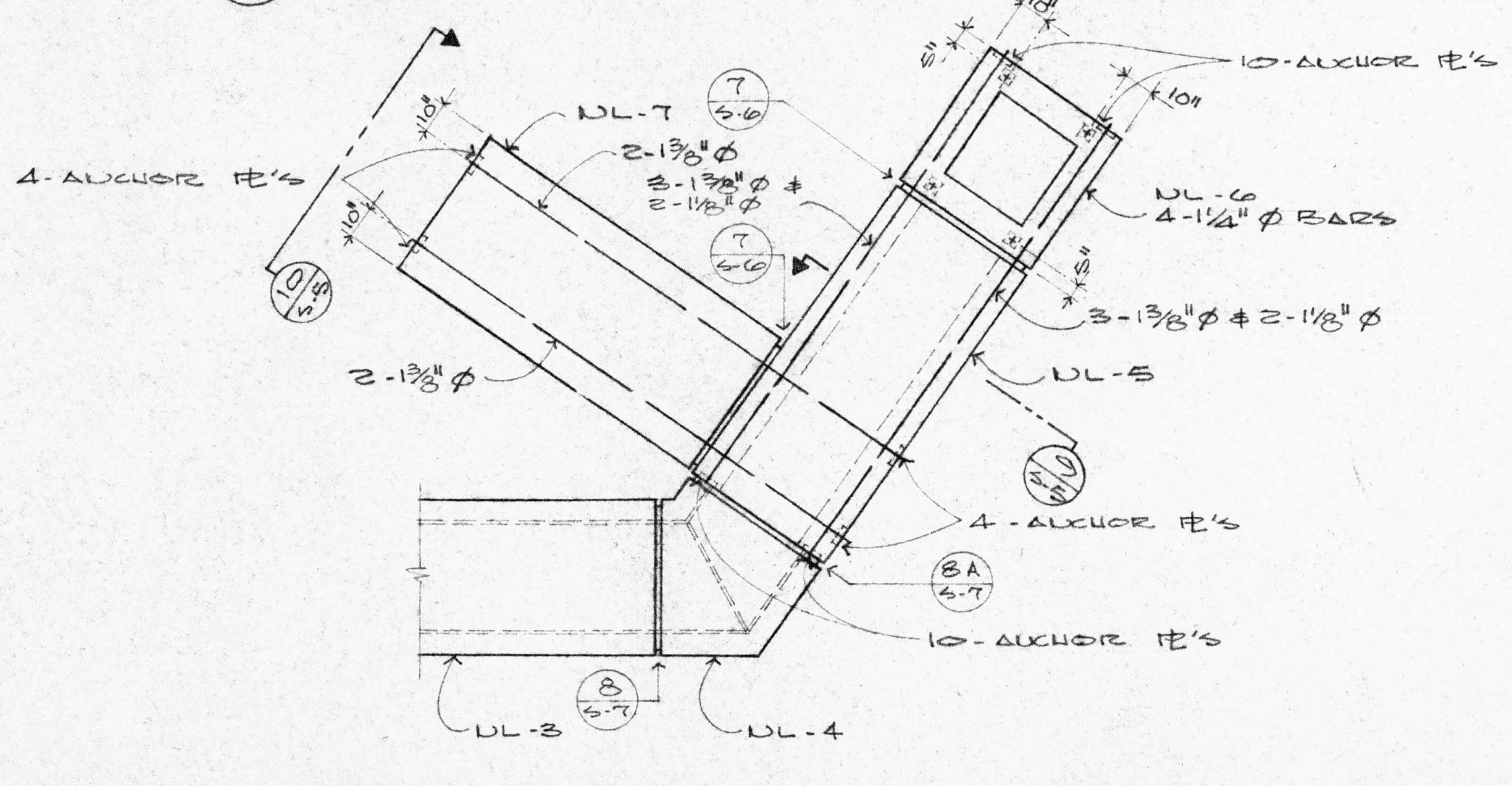
10-ANCHOR PL'S
NL-7
4-ANCHOR PL'S
2-1⅜"Ø
NL-6
4-1¼"Ø BARS
3-1⅜"Ø & 2-1⅛"Ø
NL-5
4-ANCHOR PL'S
10-ANCHOR PL'S
NL-3
NL-4

11/S-3 ¼" = 1' - 0"

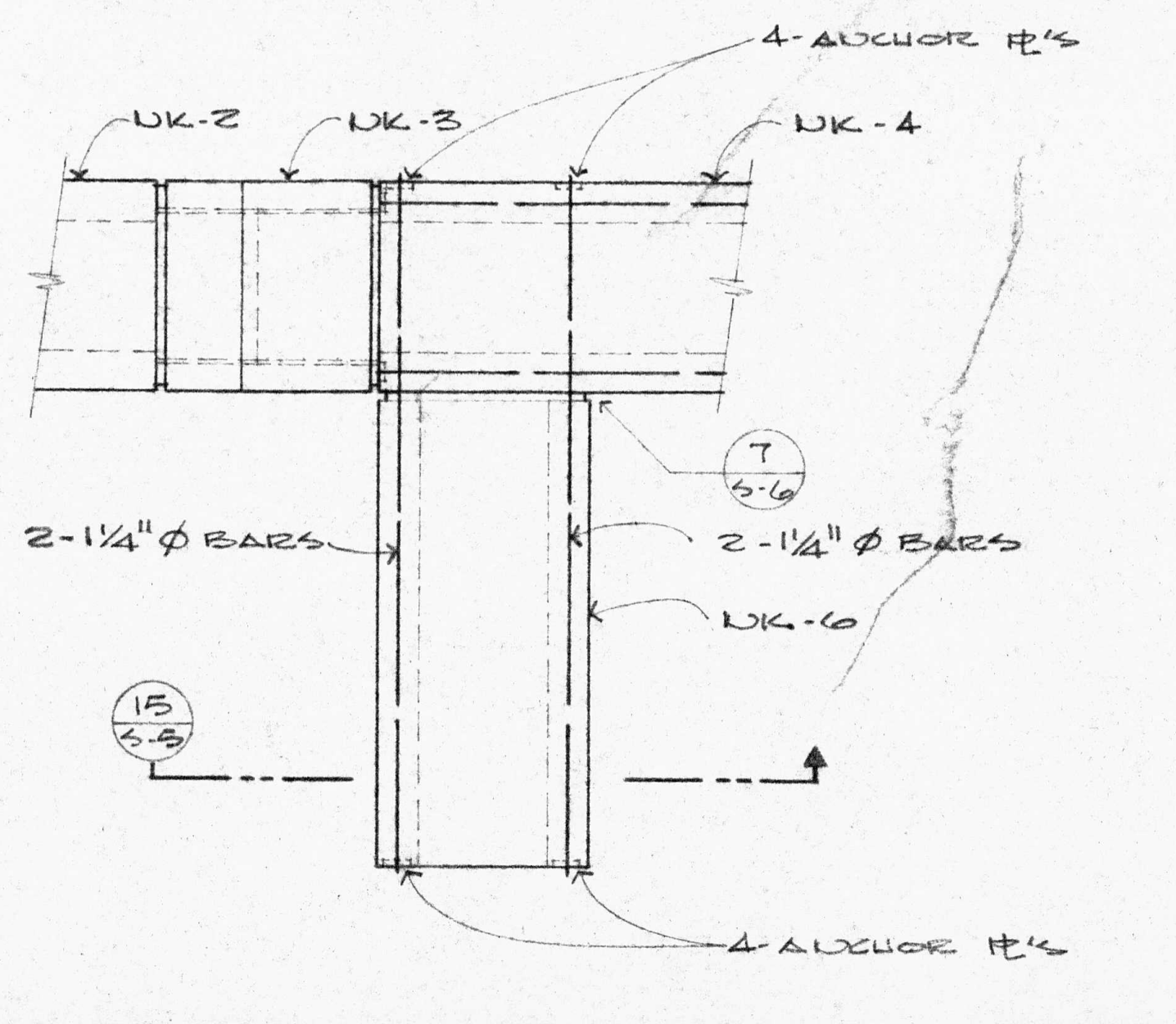
NK-2
NK-3
4-ANCHOR PL'S
NK-4
2-1¼"Ø BARS
2-1¼"Ø BARS
NK-6
4-ANCHOR PL'S

12/S-3 ¼" = 1' - 0"

GFDS ENGINEERS
CIVIL & STRUCTURAL ENGINEERS
1620 MONTGOMERY ST., SAN FRANCISCO, CALIFORNIA
S 1057

EMBARCADERO PLAZA
EMBARCADERO LOWER MARKET APPROVED REDEVELOPMENT PROJECT AREA E1

SCULPTURE
PLANS & ELEVATIONS

SAN FRANCISCO REDEVELOPMENT AGENCY IN COOPERATION
WITH THE SAN FRANCISCO RECREATION AND PARK DEPARTMENT
AND SAN FRANCISCO DEPARTMENT OF PUBLIC WORKS

JOINT VENTURE ARCHITECTS:
LAWRENCE HALPRIN & ASSOCIATES
JOHN S. BOLLES ASSOCIATES
MARIO J. CIAMPI & ASSOCIATES

SCALE: as noted
DATE: JAN. 25, 1969
DRAWN BY: jmo

S3

SHEET S3 OF 8

A-S3
B-S3
C-S3
E-S3
F-S3
G-S3
Ja-S3
Ka-S3
H-S3
I-S3
J-S3
K-S3
L-S3
M-S3
N-S3
P-S3
Q-S3
R-S3
S-S3
T-S3
U-S3
V-S3
W-S3
X-S3
Y-S3
3'-8
Precast
3'-0
Poured in place conc. shown dotted
1½ clr Typ.
2-#3x 3'-5 T
#2 spiral @ 6" pitch w/ 2 extra turns ea. end
2-#3x 5'-8 B
Note see I-S3 thru Q-S3 for extra wall & slab reinf
#11 fy = 60 KSI (4 Total)
2-#11 Cont. (8 Total)
See Q-S4
#5 @ 18" o.c. except 2 ea. side each pipe rack
Keys from 2x6
El. + 0.156'
El. -(10.177')
drainrock backfill
W.M.
#6 @ 14" o.c.
#5 @ 14" o.c.
#4 @ 16" o.c. E.F.
#5 @ 14" o.c. dowels
Key from 2x4
12" crushed rock
Pipe rack see
El. -11.677'
See 4/S-8
typ T "E" bars
Extra T "E" bars where req'd
El. -5.844
"N" Bars T
Typ. B "N" bars
Extra B "N" bars
Extra B "E" bars where req'd
12" Drain rock Typ.
See Plan for reinf.
See W-S3 & E-S3 for reinf. & Details not shown.
Grating S.M.D.
#9 @ 14"
EXTRA B "N" BARS
9'-6" N.T.S.
El. + 0.156' Max.
El. - 1.344' Min.
P.E.M. & drain S.A.D.
Water stop, see spec's
Key from 2x6
See L-S4 or Q-S4
#6 @ 18 3/4" o.c. except 2 ea. side ea. pipe rack
#10 E.F. Cont
#11 E.F. Cont.
Extra T "N" bars where req'd
Typ. T "N" bars
"E" bars T
Note: Provide cont. waterstop @ all (V) trough wall & slab c.j.'s.
2-#11 (8 Total)
#11 fy = 60 KSI (4 Total)
See L-S4
#3 @ 14" o.c. E.W.
#6 T & B
#4 @ 12" o.c.
#6 strip
water stop, see spec's, typ.
Key from 2x12
#8 @ 18 3/4" o.c. except 2 ea. side ea. pipe rack
Pipe Rack see 2/S8
12-#11 B cont.
see L-S4 or Q-S4
Extra B "N" bars where req'd
Typ. B "N" bars
Typ. B "E" bars
Extra B "E" bars
Note: Splice all cont. bm bars 40 B.D. min, stagger splices 10'-0 min. w/ no more than 2 top, 2 bottom & 2 (1 E.F.) face bars spliced at the same section.
Provide 2-#8 & 1-#6 ties @ intersection of L-S4 & Q-S4
Pipe rack footing see L-S4 & 2/S8
PLAN
Prime & caulk all exterior faces, S.M.D.
3x6 pocket drypack after welding
Mastic
See E-S3 for reinf. not noted.
S.A.D. for frame & cover
Drainrock backfill
See E-S3 for reinf. not noted
S.A.D. for frame & cover
Typ. Reinf
See P-S3 for reinf not shown
Extra bars from wall
Typ. Reinf (ea. min)
S.M.D. for frame ea. end
See H-S3 for bal.
#6 @ 14" o.c. (V) bend tops down 3'-0"
See J-S3 for bal.
#4 dowel
See E-S3
See K-S3 for bal. & reinf.
Dowel all (V) bars
Bal. Sim. H-S3 opp. hd.
See R-S3 for reinf.
See W-S2
Bend T "E" bars down & hook @ ea. side of ea. pit.
Extend #7 @ 16" o.c. see E-S3
Bend T "N" bars down 30 B.D. @ pit
Grating SMD
Hook T "E" bars 12 B.D. @ pit
Bend T "N" bars down & hook @ pit all around
Stop to "E" bars 6" clr. of face of pit
Extend #9 @ 14" o.c. (see E-S3) Hook @ E-S3 shown dotted
see E-S3 for reinf & details not noted
#9 @ 14" o.c. T & B cont.
Extend #7 Extra B "N" bars as shown.
See V-S3
4'-0"
4'-0" NTS
reinf. & details not noted sim. F-S3
Note: S.A.D. for for stair tread, riser & reveal dimensions & details
X-S3 Symm. abt.

EMBARCADERO PLAZA

EMBARCADERO LOWER MARKET APPROVED REDEVELOPMENT PROJECT AREA E1

POOL SECTIONS & DETAILS

SAN FRANCISCO REDEVELOPMENT AGENCY IN COOPERATION
WITH THE SAN FRANCISCO RECREATION AND PARK DEPARTMENT
AND SAN FRANCISCO DEPARTMENT OF PUBLIC WORKS

JOINT VENTURE ARCHITECTS:
LAWRENCE HALPRIN & ASSOCIATES
JOHN S. BOLLES ASSOCIATES
MARIO J. CIAMPI & ASSOCIATES

SCALE: ½" = 1'-0"
DATE: JAN. 25, 1969
DRAWN BY: R.S.

S 1276

S3

SHEET S3 OF 4

w.m
#4@14"o.c.
10
w.m
#4@16"o.c.
3'-0
1'-0
4"
See E-53
2-#6 T&B
w.m.
See H-53
E-53
P-53
G-53
M-53
L-53
Q-53
K-53
J-53
I-53
H-53
B-52
A-52
E.J. (4'-15.6)
A-12
H-53 opp. hd.
Sim.
M-53
G-11
4'-6
4'-9
2'-3
Lifting Inserts
6'-4
2'-3
9'-4
TOP OF STRUCT. SL. EL. (.177')
TOP OF FOOTING EL. +(.156')
TOP OF STRUCT. SL. EL. +(.177')
TOP OF STRUCT. EL. +(.156')
8 Spaces @ 9'-4"=74'-8
Q-54
9'-0
7'-0
9 Spaces @ 9'-4"=84'-0
G-53
8'-6 1/4
4'-0
TOP OF STRUCT. CONC. EL. +(.156')
EL. +(.196')
L-54
A-54
POOL OPENING
E-53
F-53
EL.-(2.804')
5'-0
SLOPE 1/2"
slope down
slope up
G-54 Sim. opp. hd.
X-53
EL.-(1.394')
DN
5'-0
E.J. S.A.D.
U-54
F-53 opp. hd.
7'-0
C.L.
EL.+(.196')
EL.-(2.804')
X-53 opp. hd.
EL.-(2.804')
EL.-(1.344')
E.J., S.A.D.
M-54
F-53 opp. hd.
A-54
EC
EE
EG
EI
EK
EM
EO
EQ
ES
A
A'
NC
NE
NG
NI
NK
NM
NO
NQ
3
5
6
8
9
I
L
N
R

Note: See E-53 for dim., details & reinf. not noted or shown. Extend all top bars 40 B.D. into G-53 & hook all bot. bars @ F.S. of bracket.

A-52
3/8"=1'-0

B-52
3/8"=1'-0

Note: Sculpture not shown see Sculpture Plan

Brick paving, on 4" conc. slab, reinf w/ 6x6-10/10 W.W.M., on 2" sand. S.A.D. for extent, e.j.'s & paving.

Brick paving on 4" conc. slab. S.A.D.

FOUNTAIN POOL PLAN
AT COPING 1/8"=1'-0

EMBARCADERO PLAZA
EMBARCADERO LOWER MARKET APPROVED REDEVELOPMENT PROJECT AREA E1

SCALE: 1/4"=1'-0"
DATE: JAN. 25, 1969
DRAWN BY: R. S.

POOL COPING PLAN

Roger Ampin
S-1276

SAN FRANCISCO REDEVELOPMENT AGENCY IN COOPERATION
WITH THE SAN FRANCISCO RECREATION AND PARK DEPARTMENT
AND SAN FRANCISCO DEPARTMENT OF PUBLIC WORKS

JOINT VENTURE ARCHITECTS:
LAWRENCE HALPRIN & ASSOCIATES
JOHN S. BOLLES ASSOCIATES
MARIO J. CIAMPI & ASSOCIATES

S2

SHEET S2 OF 4

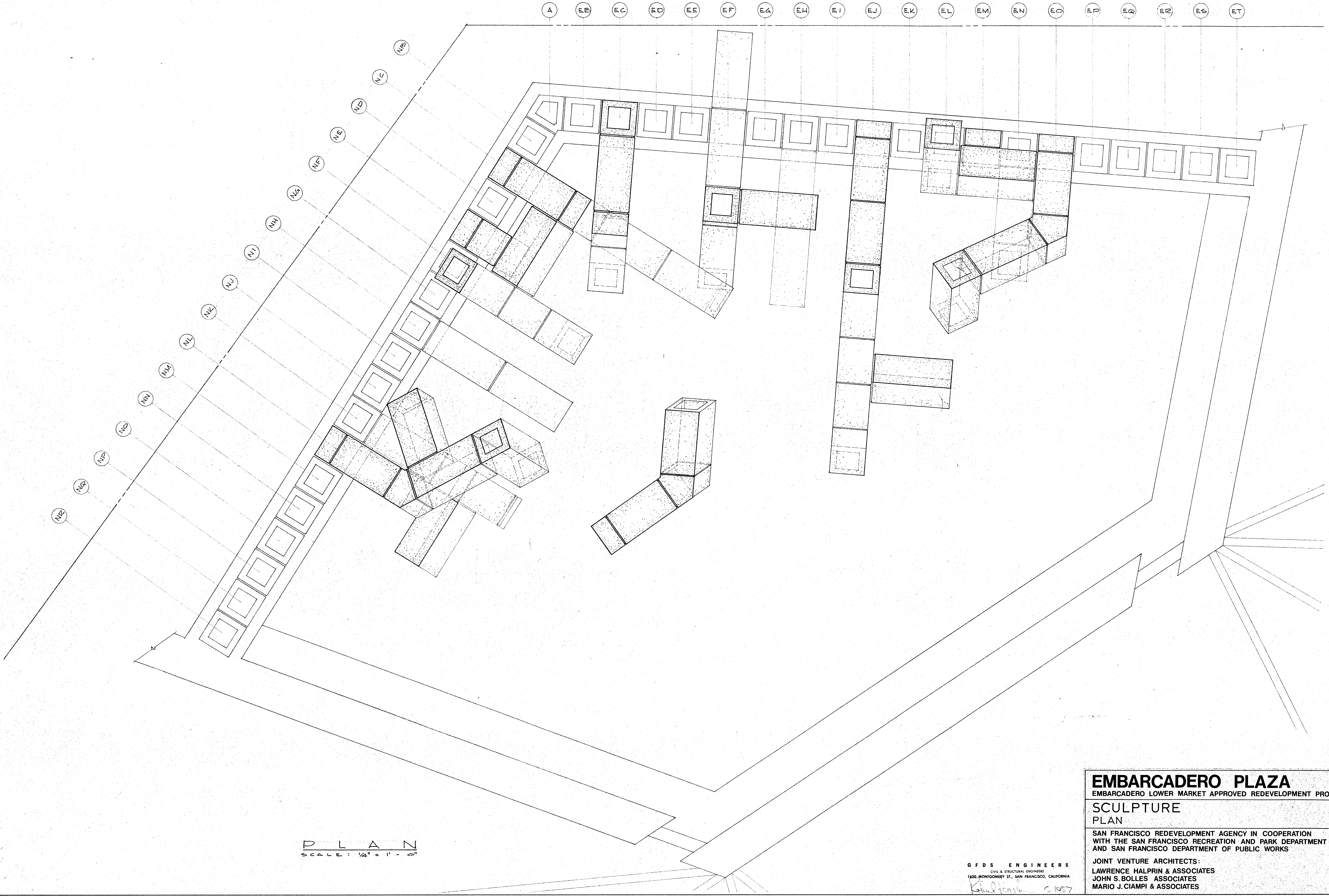
A
EB
EC
ED
EE
EF
EG
EH
EI
EJ
EK
EL
EM
EN
EO
EP
EQ
ER
ES
ET
NB
NC
ND
NE
NF
NG
NH
NI
NJ
NK
NL
NM
NN
NO
NP
NQ
NR
N

PLAN
SCALE: 1/4" = 1'-0"

GFDS ENGINEERS
CIVIL & STRUCTURAL ENGINEERS
1620 MONTGOMERY ST., SAN FRANCISCO, CALIFORNIA
S 1057

EMBARCADERO PLAZA

EMBARCADERO LOWER MARKET APPROVED REDEVELOPMENT PROJECT AREA E1

SCULPTURE
PLAN

SAN FRANCISCO REDEVELOPMENT AGENCY IN COOPERATION
WITH THE SAN FRANCISCO RECREATION AND PARK DEPARTMENT
AND SAN FRANCISCO DEPARTMENT OF PUBLIC WORKS

JOINT VENTURE ARCHITECTS:
LAWRENCE HALPRIN & ASSOCIATES
JOHN S. BOLLES ASSOCIATES
MARIO J. CIAMPI & ASSOCIATES

SCALE: as noted
DATE: JAN. 25, 1969
DRAWN BY: jmo

S1

SHEET S1 OF 8

FOUNTAIN POOL PLAN AT MAT FOUNDATION 1/4"=1'-0

—G-S1— 3/8"=1'-0"

—J-S1— 3/8"=1'-0"

S.M.D.
3'-0"
See A-S3 for slab reinf.
See A-S3 & A-S1 for wall reinf.
#4 ɸ Hoops E.F @ 12" o.c.
#6 @ 12" E.F. all around
W.M.
1'-0"
5'-0"
88'-0
26'-0
28'-10
51'-4
80'-0
9'-2
19'-6
17'-0
41'-0
66'-6
61'-0
60'-0
13'-9
13'-6
42'-0
22'-6
8'-0
CONST. JT. POUR BIG BEAM FROM 3 TO 9 WITHOUT ANY VERT. JOINTS.
CONST. JT. POUR BIG BEAM FROM 3 TO 9 WITHOUT ANY VERTICAL JOINTS
T.O. CONC. SLAB EL.-(0.177')
T.O. CONC. SLAB EL.-(11.50')
T.O. CONC. SLAB EL.-(6.177') T.O. TOPPING EL.-(5.844')
-14.177
Valley Line @ bottom of mat.
16 spaces @ 4'-8 = 74'-8
13 spaces @ 4'-8 = 60'-8
#7 T ɸ 6 B "E" bars, extra
#8 "E" bars T & B extra
#9 "E" bars @ 14" o.c. T & B typ.
#9 "N" bars @ 14" o.c. T
Extend 3-#8 B extra @ 14" o.c.
3-#7 x 15'-0 extra "N" & "E" bars T & B ctr. on
4-#9 x 20'-0 T / 7-#9 x 20'-0 B Extra "N" bars @ 14" o.c. ctr. on
3-#8 x 16'-0 extra T & B "E" bars @ 14" o.c.
5-#10 x 20'-0 T & 5-#7 x 16'-0 B extra
#9 @ 14" o.c. T
#9 @ 14" o.c. B
S.A.D.
40 B.D.
See 2/S3
See 3/S4
A, B, C, EC, EF, EJ, EK, EO, N, Q, 3, 5, 6, 9
C-S3, D-S3, E-S3, F-S3, M-S4, R-S3, S-S3, T-S3, U-S4, V-S3, W-S3, L-S4, G-S4
El. -5.844'
4 T Bars Max.
Cut off Typ. T bars @ Pipe Rack so that 4-#11 or 3-#10 extra T bars only pass thru pipe rack stiffener ℞'s in each direction.
See 3/S-4 & 2/S-6
Pipe Rack See 3/S-4 & 2/S-6
#6 ⊔ @ 14" o.c. ea. way
1'-2"
6'-0 x 6'-0

EMBARCADERO PLAZA

EMBARCADERO LOWER MARKET APPROVED REDEVELOPMENT PROJECT AREA E1

POOL FOUNDATION PLAN

SAN FRANCISCO REDEVELOPMENT AGENCY IN COOPERATION
WITH THE SAN FRANCISCO RECREATION AND PARK DEPARTMENT
AND SAN FRANCISCO DEPARTMENT OF PUBLIC WORKS

JOINT VENTURE ARCHITECTS:

LAWRENCE HALPRIN & ASSOCIATES
JOHN S. BOLLES ASSOCIATES
MARIO J. CIAMPI & ASSOCIATES

SCALE: AS NOTED

DATE: JAN. 25, 1969

DRAWN BY: R.S.

S 1276

S1

SHEET S1 OF 4

NOTE:
FOR DETAIL OF PIPING and VALVES IN VAULT and POOL SEE SHEETS M2,3,4,5, & 6.
EXISTING 8" DOMESTIC WATER.
EXISTING 12" COMBINATION SEWER
SIDEWALK VENT TRAP PER CITY STANDARDS SMITH FIG. 2110-DOUBLE VANDAL PROOF WITH DEFLECTOR GRATE AND EXTENSION COLLAR AND GALV. TOP
8" C.I. DRAIN BY POOL CONTRACTOR. CONNECT'N BY CITY DEPT. OF PUBLIC WORKS.
EXISTING MANHOLE
RIM = 1.60
INV. = 9.93
3" WATER SUPPLY BY POOL CONTRACTOR. CONNECTION BY CITY WATER DEPT.
BACK FLOW PREVENTION DEVICE. SEE VAULT PLAN and SECTIONS, SHEET M-4.
PROVIDE 3" GATE VALVE and 3" COPPER IRRIGAT'N LINE. STUB 1'-0" BEYOND VAULT TO PLANTING AREA SEE VAULT PLAN and SECTIONS SHEET-M4.
2" MT. CONDUIT FOR IRRIGATION CONTROL WIRING. RUN ACROSS VAULT CEILING and STUB 1'-0" BEYOND VAULT INTO PLANTING AREA, 24" MIN. BELOW GRADE.
IRRIGATION CONTROLLER 24" WIDE, 15" HIGH, 16" DEEP MOUNT @ +3'-0" TO BTM.
STUB & CAP 2'-0" BEYOND EDGE OF PAVING.
1½" PIPING FOR FUTURE GAS
1½" PIPING FOR FUTURE WATER
CLAY ST.
S
W
POOL DRAIN VALVE.
BACK WATER VALVE.
POOL FILL VALVE.
POOL FILL THRU ELEMENT "NC".
POOL DRAIN, SEE SHEET M4
FOUNTAIN MECHANICAL VAULT. SEE SHEET M4,5.
FOUNTAIN ELECT. VAULT. SEE SHT. E2.
PROVIDE 3" LUBRICATED COCK FOR GAS SHUTOFF.
P.G.&E. TRANSFORMER VAULT SEE DETAIL THIS SHEET.
GAS METER BY P.G.&E.
POOL OVERFLOW SEE DETAIL SHEET M6
8" POOL OVERFLOW PIPING
FOR CONTINUATION SEE DRAINAGE PLAN SHEET # 3.
BACKWATER VALVE JOSAM #1100 W/SOIL PIPE EXTENSION TO GRADE.
SWB
LVL1-9,11 and LVL3-1,3
LVP 13,15,17
13
LVL1-9 (UP LIGHT TYP FOR 3)
LVL3-1 (DN. LIGHT TYP FOR 3)
LVL1-11 (UP LIGHT TYP FOR 3)
LVL3-3 (DN. LIGHT, TYP FOR 3)
15
LVL1-13,15 and LVL3-5,7.
LVL1-13 (UP LIGHT TYP FOR 3)
LVL3-5 (DN LIGHT, TYP FOR 3)
STUB & CAP 2'-0" BEYOND PAVING
G
W
DEAD END & CAP. VERIFY EXACT LOCATION W/ ARCH. (TYPICAL)
STREET WASHER BOX (TYP. FOR 15) WADE # W8608 SEE ARCH. SHT. #3 FOR LOCATION
3/4" (TYP.)
1" CW LINE (TYPICAL)
1"X1"X 3/4" TEE (TYP.)
A 250 150
(TYP. FOR 12) SEE DETAIL
A E4
17
LVL1-15 (UP LIGHT TYP. FOR 3)
LVL3-7 (DN LIGHT TYP. FOR 3)
the EMBARCADERO
C 275
(TYP. FOR 9) SEE DETAIL
C E4
1
3
5
HYL-1,3,5.
4
B 150
(TYP. FOR 2) SEE DETAIL
B E4
2
LVL3-2,4,6.
D 50
TYP. FOR (4) SEE DETAIL
D E4
6
NOTE: PULLBOXES NOT TO EXCEED 200'-0" APART, OR AS DIRECTED BY ARCHITECT.

PLAZA MECHANICAL AND ELECTRICAL PLAN
SCALE: 1" = 20'-0"

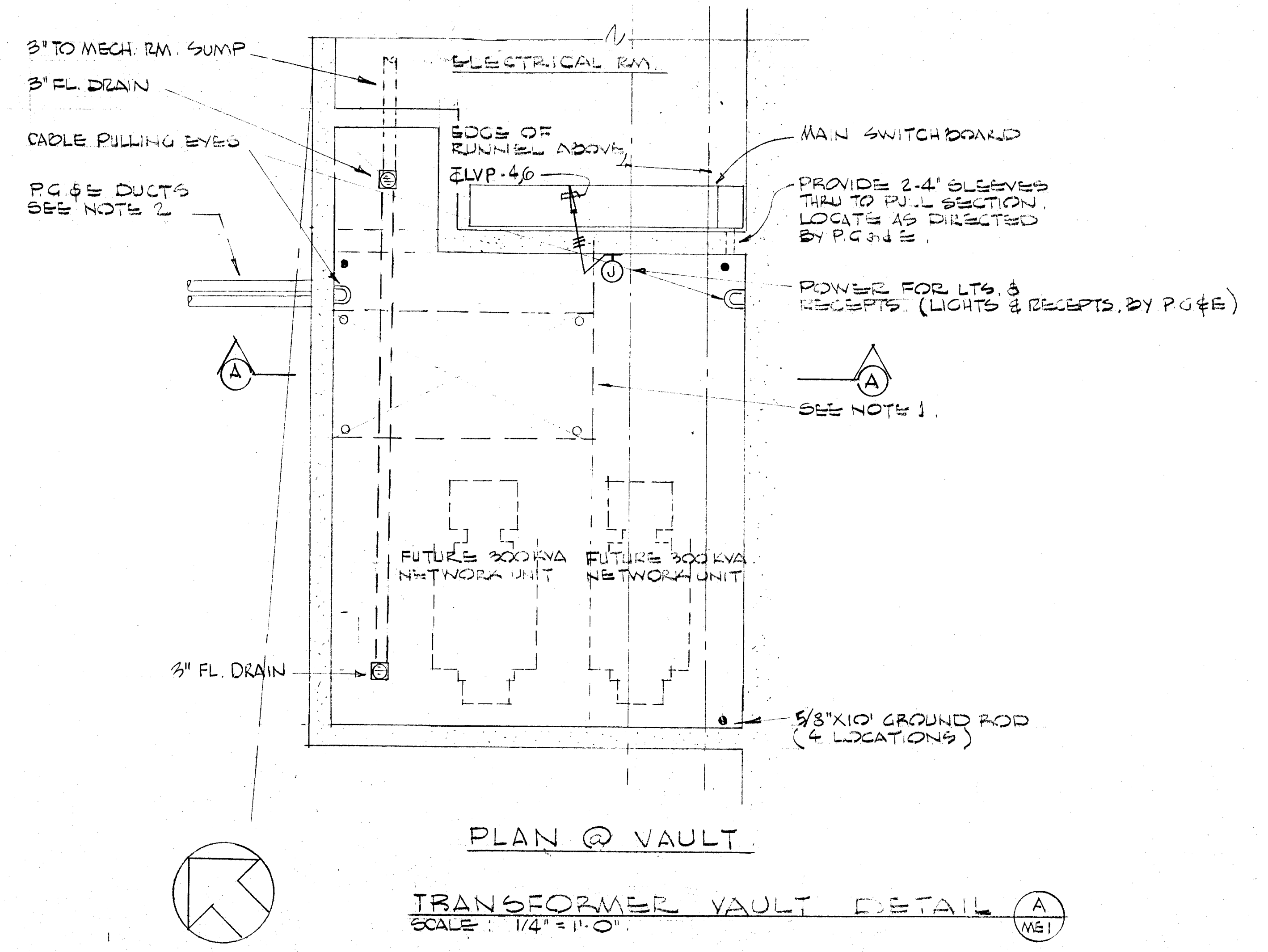
3" TO MECH. RM. SUMP
3" FL. DRAIN
CABLE PULLING EYES
P.G.&E. DUCTS SEE NOTE 2
ELECTRICAL RM.
EDGE OF RUNNEL ABOVE
℄ LVP-4,6
MAIN SWITCHBOARD
PROVIDE 2-4" SLEEVES THRU TO PULL SECTION. LOCATE AS DIRECTED BY P.G. and E.
POWER FOR LTS. & RECEPTS. (LIGHTS & RECEPTS. BY P.G.&E.)
A
SEE NOTE 1.
FUTURE 300 KVA NETWORK UNIT
FUTURE 300 KVA NETWORK UNIT
3" FL. DRAIN
5/8"X10' GROUND ROD (4 LOCATIONS)
PLAN @ VAULT

TRANSFORMER VAULT DETAIL (A / ME1)
SCALE: 1/4" = 1'-0"

EMBARCADERO PLAZA

EMBARCADERO LOWER MARKET APPROVED REDEVELOPMENT PROJECT AREA E1

PLAZA MECHANICAL AND ELECTRICAL PLAN

SAN FRANCISCO REDEVELOPMENT AGENCY IN COOPERATION
WITH THE SAN FRANCISCO RECREATION AND PARK DEPARTMENT
AND SAN FRANCISCO DEPARTMENT OF PUBLIC WORKS

JOINT VENTURE ARCHITECTS:
LAWRENCE HALPRIN & ASSOCIATES
JOHN S. BOLLES ASSOCIATES
MARIO J. CIAMPI & ASSOCIATES

MECHANICAL AND ELECTRICAL ENGRS.
BEAMER • WILKINSON AND ASSO.
478 SANTA CLARA AVE.
OAKLAND, CALIF. 94610 PH. 415-834-4177

SCALE: AS NOTED
DATE: 25 JAN 69
DRAWN BY: RG/VSD

ME1

SHEET ME 1 OF 1

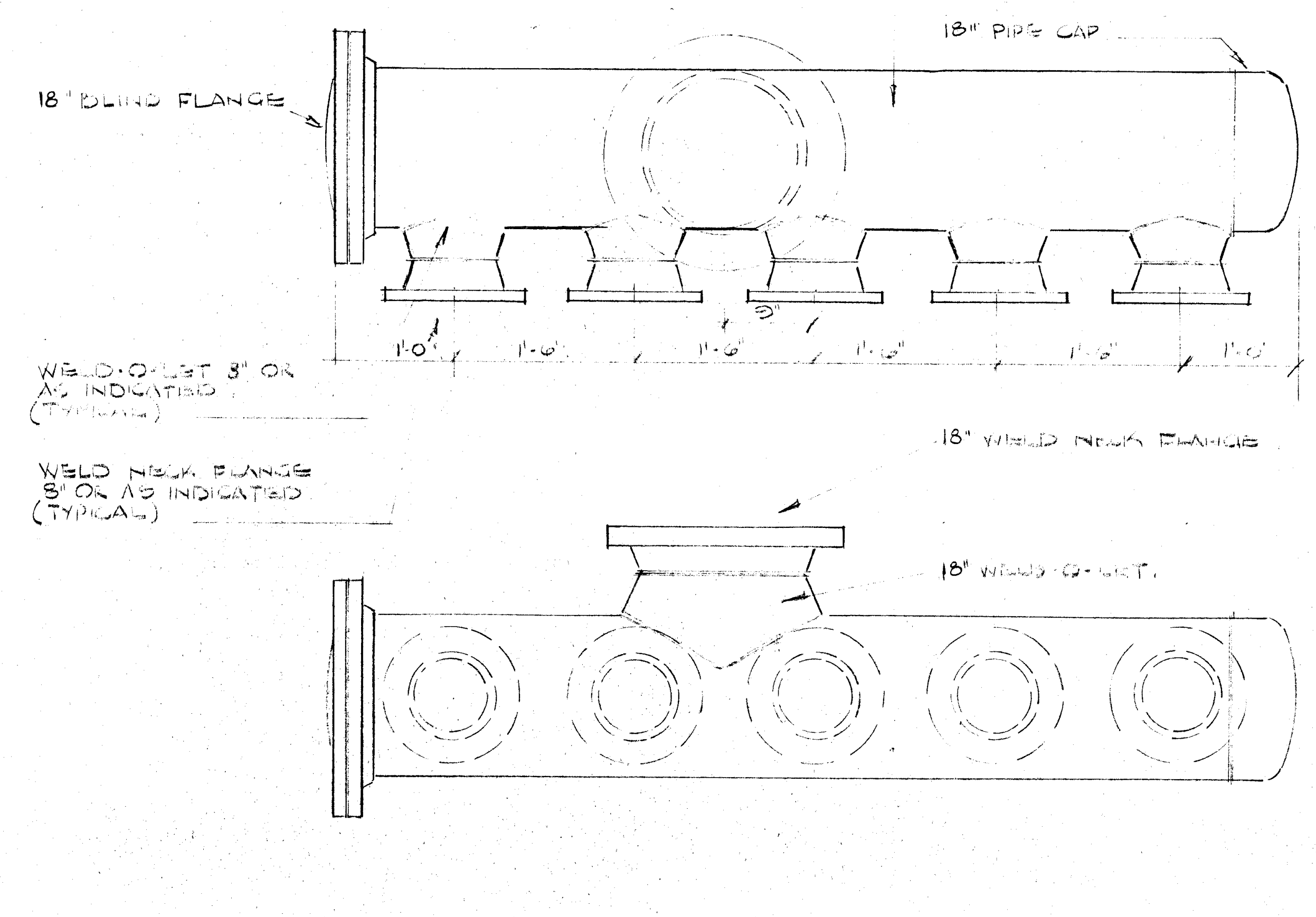
STANDARD WALL 18" PIPE
18" PIPE CAP
18" BLIND FLANGE
1'-0"
1'-6"
9"
1'-6"
1'-6"
1'-6"
1'-0"
WELD-O-LET 8" OR AS INDICATED (TYPICAL)
WELD NECK FLANGE 8" OR AS INDICATED (TYPICAL)
18" WELD NECK FLANGE
18" WELD-O-LET.

PUMPING MANIFOLD DETAIL (A/M6)
SCALE: 1" = 1'-0"
NOTE: TYPICAL FOR 2; 2 ARE OPPOSITE HAND
NOTE: TWO MANIFOLDS HAVE ONE 3" PIPE EACH (SEE M2)

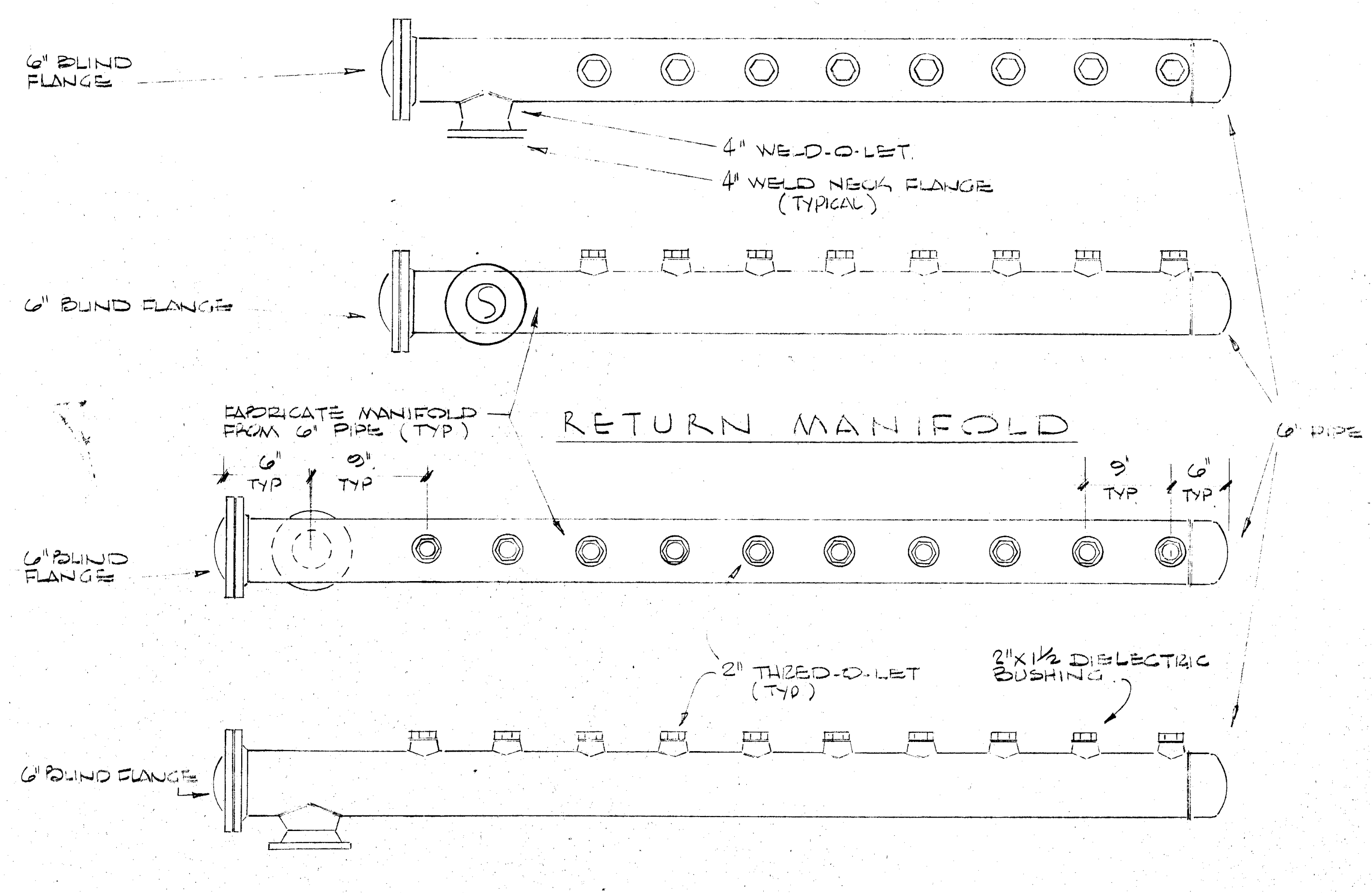
6" BLIND FLANGE
4" WELD-O-LET.
4" WELD NECK FLANGE (TYPICAL)
6" BLIND FLANGE
FABRICATE MANIFOLD FROM 6" PIPE (TYP)
RETURN MANIFOLD
6" TYP
9" TYP
9" TYP
6" TYP
6" PIPE CAP
6" BLIND FLANGE
2" THRED-O-LET (TYP)
2"X1½ DIELECTRIC BUSHING
6" BLIND FLANGE

SUCTION MANIFOLD

FILTER MANIFOLD DETAILS (B/M6)
SCALE: 1" = 1'-0"

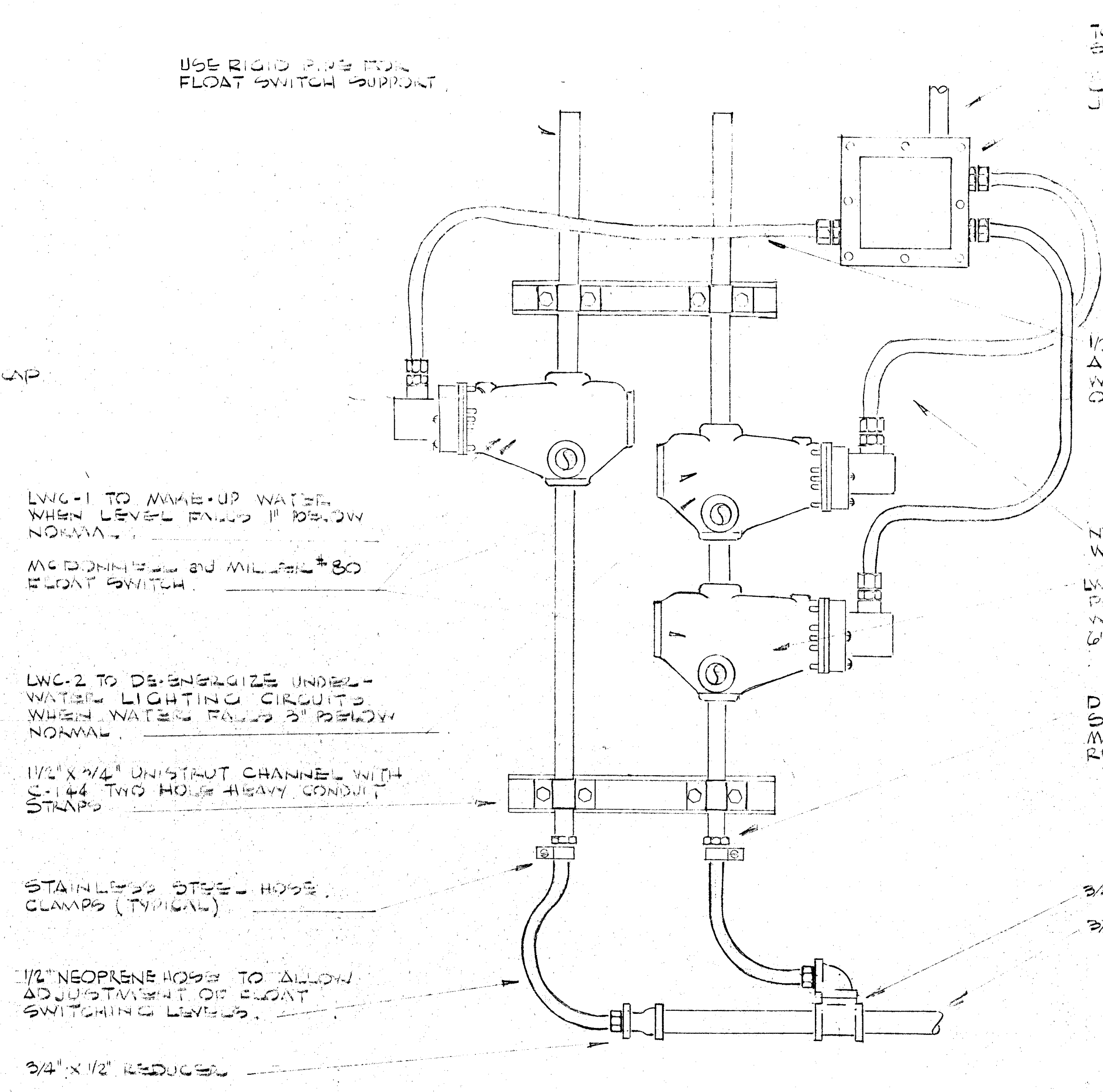
USE RIGID PIPE FOR FLOAT SWITCH SUPPORT.
TO CONTROL DEVICES SEE SHEET E-2.
CAST WEATHERPROOF JUNCTION BOX.
1/2" SEALTITE (TYP) ALLOW 4" MIN. DOWNWARD ADJUSTMENT OF McDONNELL UNITS.
LWC-1 TO MAKE-UP WATER WHEN LEVEL FALLS 1" BELOW NORMAL.
McDONNELL and MILLER #80 FLOAT SWITCH.
NOMINAL POOL WATER LINE.
LWC-3 TO DE-ENERGIZE PUMP CONTROLS WHEN WATER LEVEL FALLS 6" BELOW NORMAL.
LWC-2 TO DE-ENERGIZE UNDERWATER LIGHTING CIRCUITS WHEN WATER FALLS 3" BELOW NORMAL.
DIXON SERIES MSL LONG SHANK HOSE NIPPLES MALE OR FEMALE AS REQUIRED.
1½"X¾" UNISTRUT CHANNEL WITH C-144 TWO HOLE HEAVY CONDUIT STRAPS.
STAINLESS STEEL HOSE CLAMPS (TYPICAL).
¾"X¾"X½" REDUCING TEE.
¾" BRASS PIPE TO POOL.
½" NEOPRENE HOSE TO ALLOW ADJUSTMENT OF FLOAT SWITCHING LEVELS.
¾"X½" REDUCER.

WATER LEVEL CONTROLS (C/M6)
NOT TO SCALE

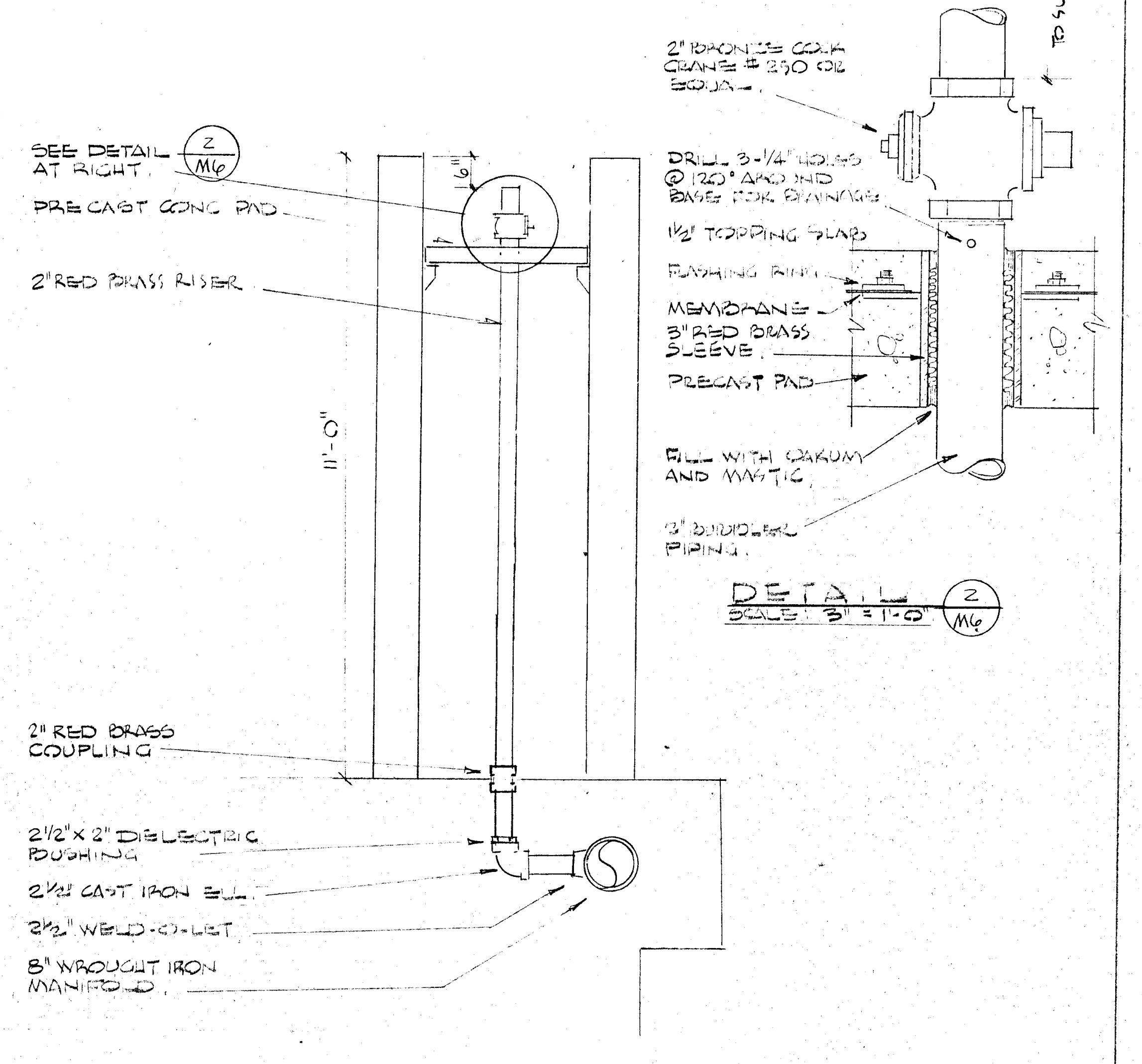
RED BRASS NIPPLE - REAM END CLEAN.
TO SUIT
2" BRONZE COCK CRANE #250 OR EQUAL.
DRILL 3-¼" HOLES @ 120° AROUND BASE FOR DRAINAGE.
1½" TOPPING SLAB
FLASHING RING
MEMBRANE
3" RED BRASS SLEEVE.
PRECAST PAD
FILL WITH OAKUM AND MASTIC.
3" BUBBLER PIPING.
DETAIL (Z/M6)
SCALE: 3" = 1'-0"
SEE DETAIL (Z/M6) AT RIGHT.
PRECAST CONC PAD
6"
2" RED BRASS RISER
11'-0"
2" RED BRASS COUPLING
2½"X2" DIELECTRIC BUSHING
2½" CAST IRON ELL.
2½" WELD-O-LET
8" WROUGHT IRON MANIFOLD.

PIPING DETAILS FOR 11'-0" VERTICAL ELEMENTS (D/M6)
NOT TO SCALE

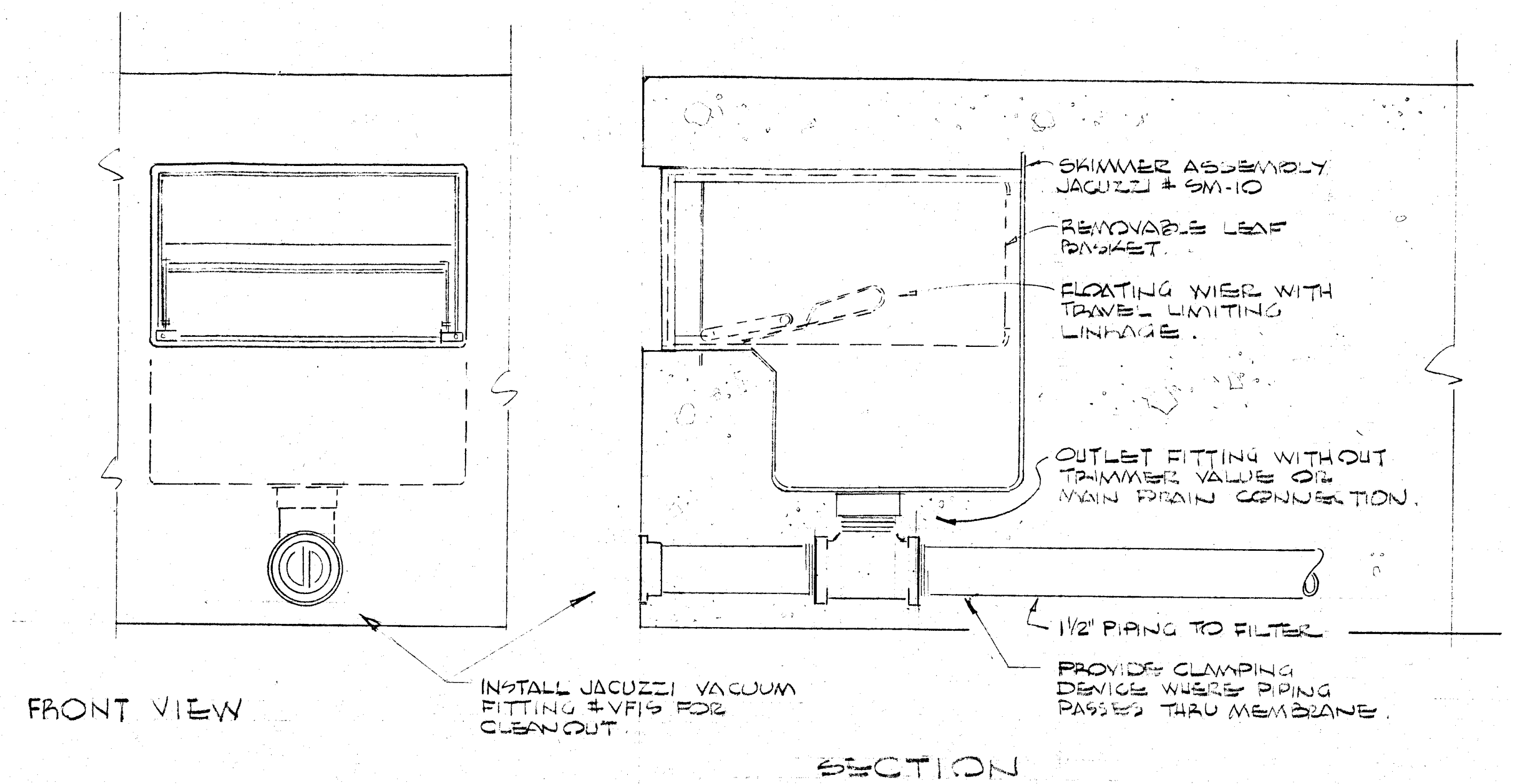
SKIMMER ASSEMBLY JACUZZI # SM-10
REMOVABLE LEAF BASKET.
FLOATING WIER WITH TRAVEL LIMITING LINKAGE.
OUTLET FITTING WITHOUT TRIMMER VALVE OR MAIN DRAIN CONNECTION.
1½" PIPING TO FILTER
PROVIDE CLAMPING DEVICE WHERE PIPING PASSES THRU MEMBRANE.
INSTALL JACUZZI VACUUM FITTING #VF15 FOR CLEANOUT.
FRONT VIEW
SECTION

SKIMMER DETAIL (E/M5)
SCALE: 3" = 1'-0"

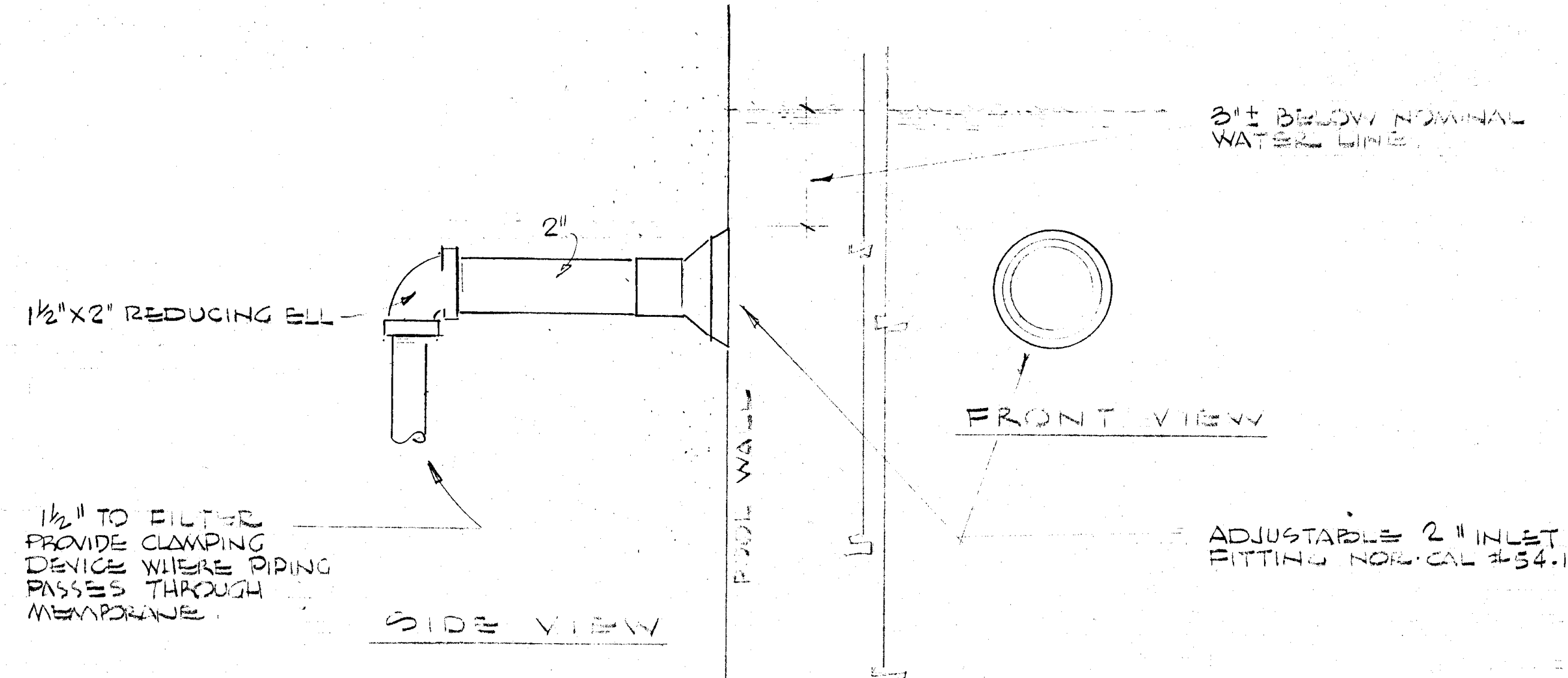
3"± BELOW NOMINAL WATER LINE.
2"
1½"X2" REDUCING ELL
POOL WALL
FRONT VIEW
1½" TO FILTER PROVIDE CLAMPING DEVICE WHERE PIPING PASSES THROUGH MEMBRANE.
SIDE VIEW
ADJUSTABLE 2" INLET FITTING NOR-CAL #54-101-3/1

FILTER RETURN FITTING DETAIL (F/M6)
SCALE: 3" = 1'-0"

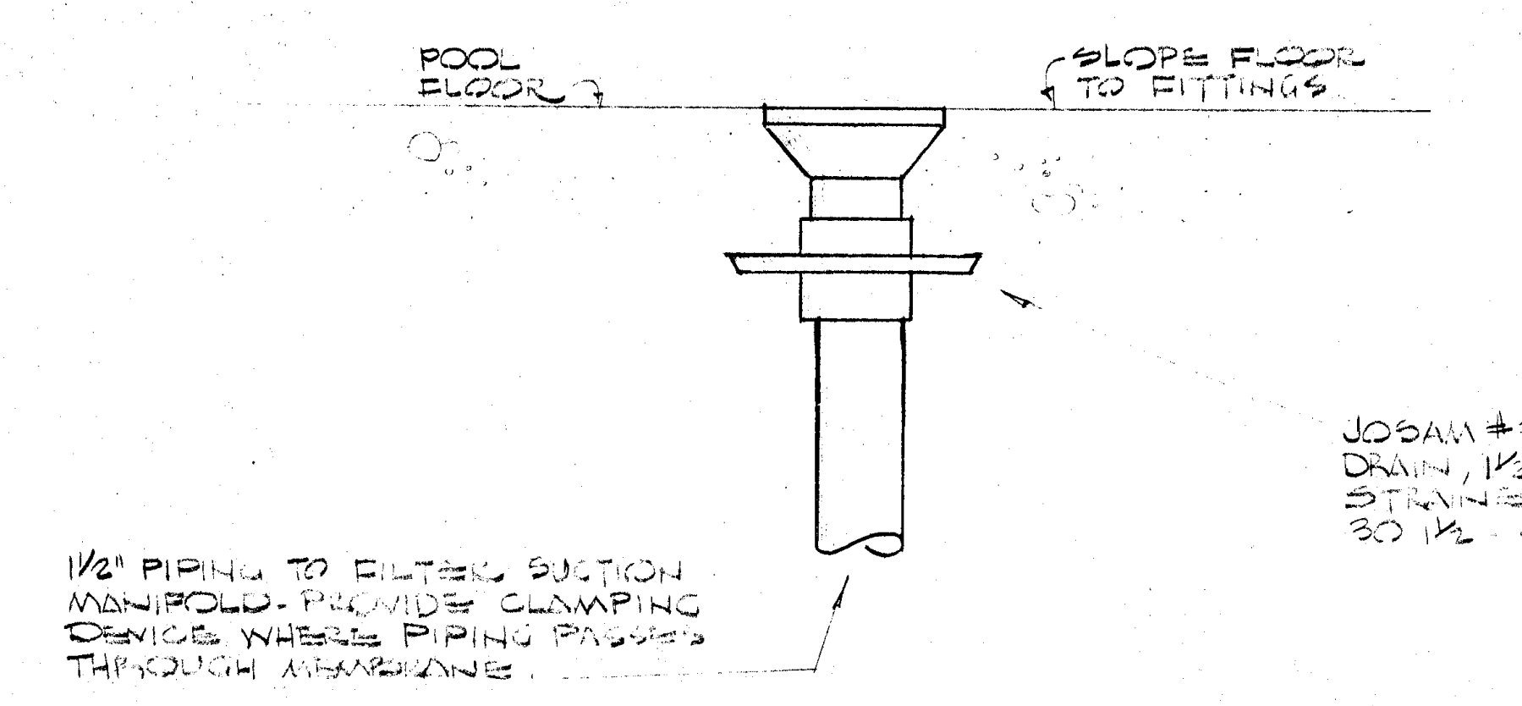
POOL FLOOR
SLOPE FLOOR TO FITTINGS
JOSAM #300 FLOOR DRAIN, 1½" W/ 4 TYPE "A" STRAINER CATALOG 30 1½ - 4 A-SF
1½" PIPING TO FILTER SUCTION MANIFOLD - PROVIDE CLAMPING DEVICE WHERE PIPING PASSES THROUGH MEMBRANE.

FILTER SUCTION FITTING DETAIL (F/M6)
SCALE: 1½" = 1'-0"

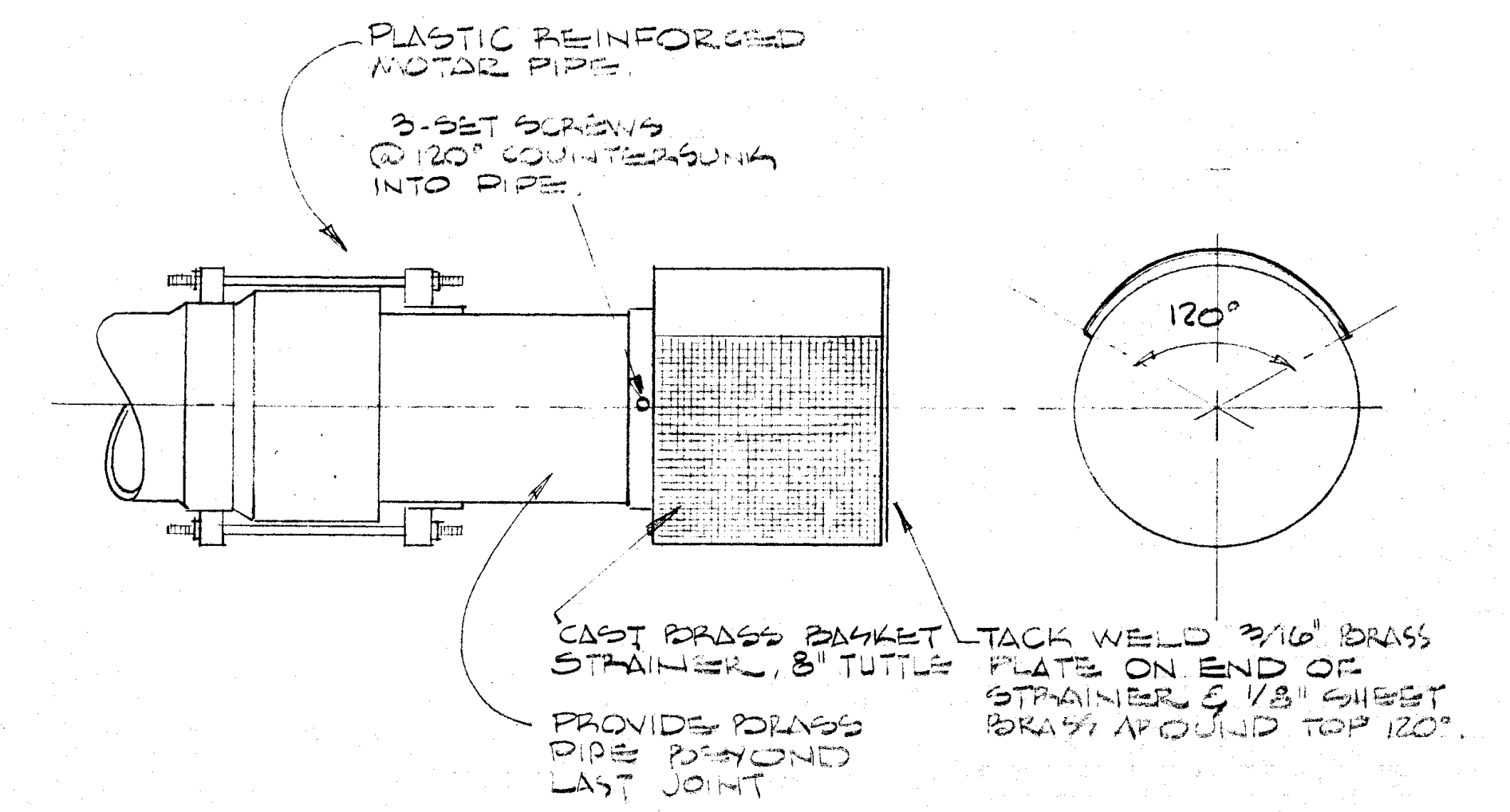
PLASTIC REINFORCED MOTAR PIPE.
3-SET SCREWS @120° COUNTERSUNK INTO PIPE.
120°
CAST BRASS BASKET STRAINER, 8" TUTTLE
TACK WELD 3/16" BRASS PLATE ON END OF STRAINER & 1/8" SHEET BRASS AROUND TOP 120°.
PROVIDE BRASS PIPE BEYOND LAST JOINT

PIPE TERMINATION DETAIL
SCALE: 1½" = 1'-0"

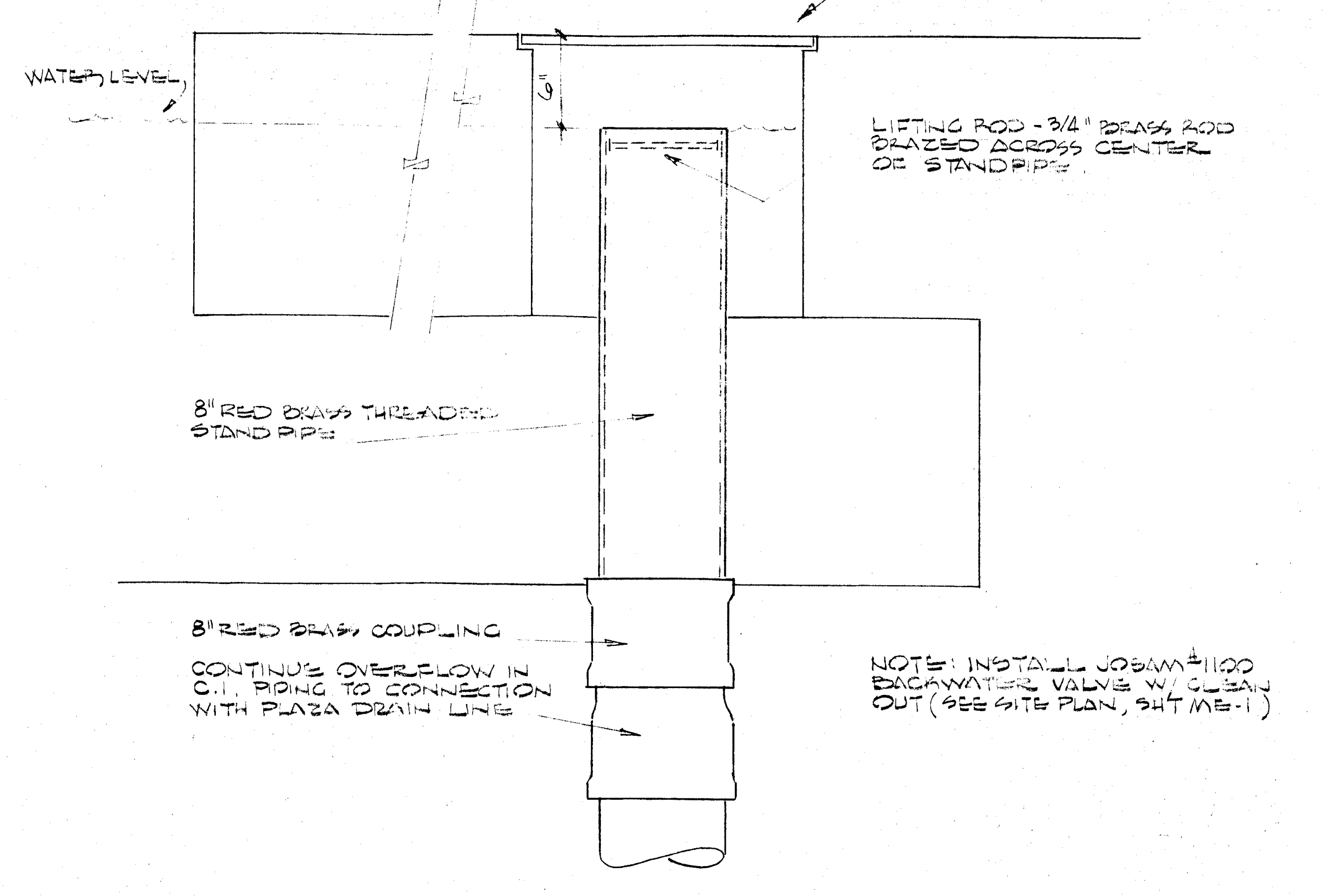
18"X18" CAST BRONZE CONC. FILL ACCESS PLATE IN WALK WAY.
WATER LEVEL
6"
LIFTING ROD - ¾" BRASS ROD BRAZED ACROSS CENTER OF STANDPIPE.
8" RED BRASS THREADED STAND PIPE
8" RED BRASS COUPLING
CONTINUE OVERFLOW IN C.I. PIPING TO CONNECTION WITH PLAZA DRAIN LINE
NOTE: INSTALL JOSAM #1100 BACKWATER VALVE W/ CLEAN OUT (SEE SITE PLAN, SH'T ME-1)

OVERFLOW FITTINGS DETAILS (J/M6)
SCALE: 1½" = 1'-0".

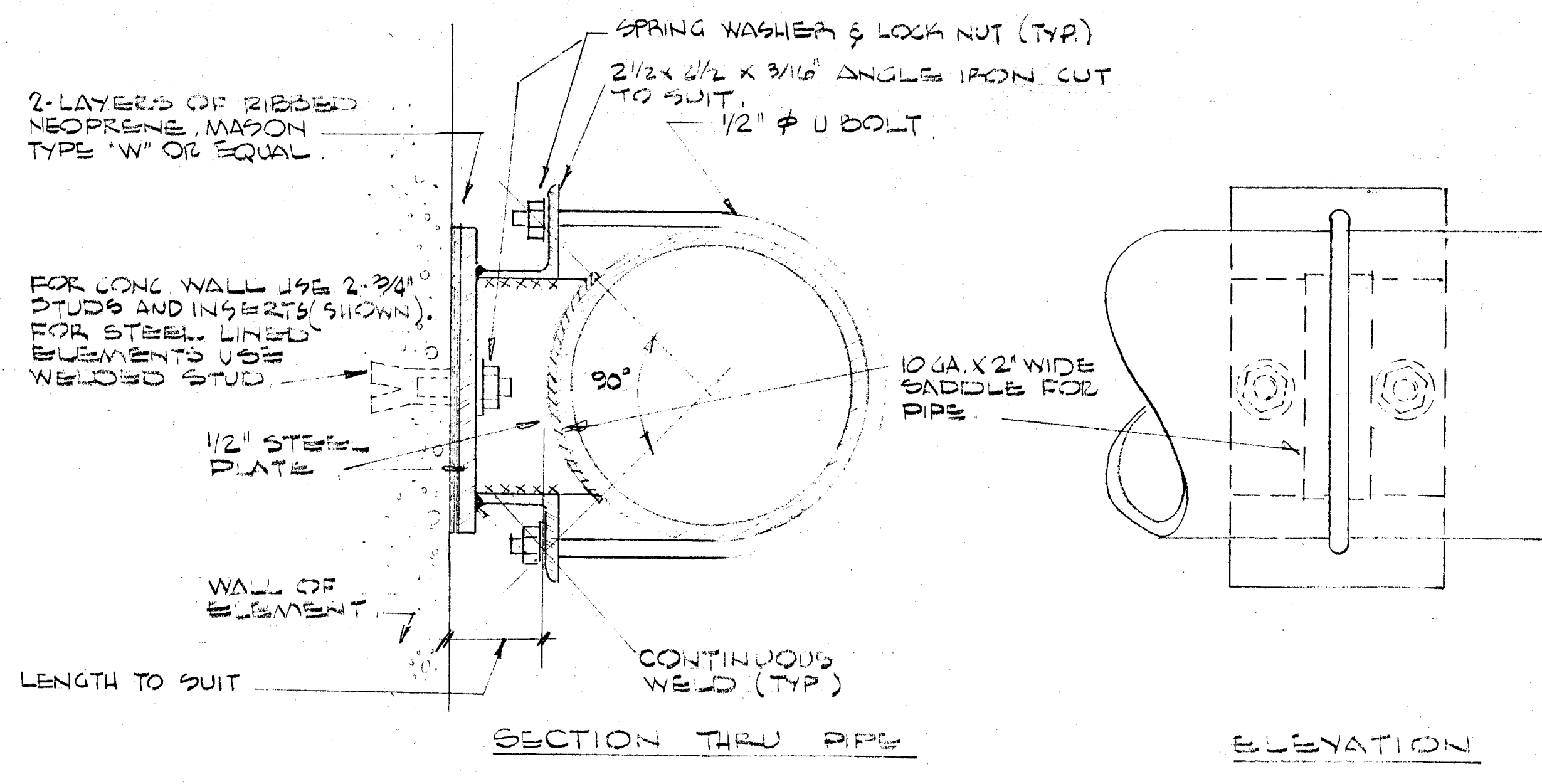
SPRING WASHER & LOCK NUT (TYP.)
2½ x 2½ x 3/16" ANGLE IRON CUT TO SUIT.
½" ⌀ U BOLT
2-LAYERS OF RIBBED NEOPRENE, MASON TYPE "W" OR EQUAL.
FOR CONC. WALL USE 2-¾" STUDS AND INSERTS (SHOWN). FOR STEEL LINED ELEMENTS USE WELDED STUD.
90°
10 GA. X 2" WIDE SADDLE FOR PIPE.
½" STEEL PLATE
WALL OF ELEMENT
LENGTH TO SUIT
CONTINUOUS WELD (TYP.)
SECTION THRU PIPE
ELEVATION

NOTE: ENTIRE SUPPORT ASSEMBLY SHALL BE HOT DIP GALVANIZED AFTER FABRICATION.

PIPE SUPPORT DETAIL (K/M6)
SCALE: 3" = 1'-0"
PROVIDE WITHIN 2'-0" OF EACH PIPE CONNECTION (BOTH SIDES) AND AT 10'-0" MAX. SPACING.

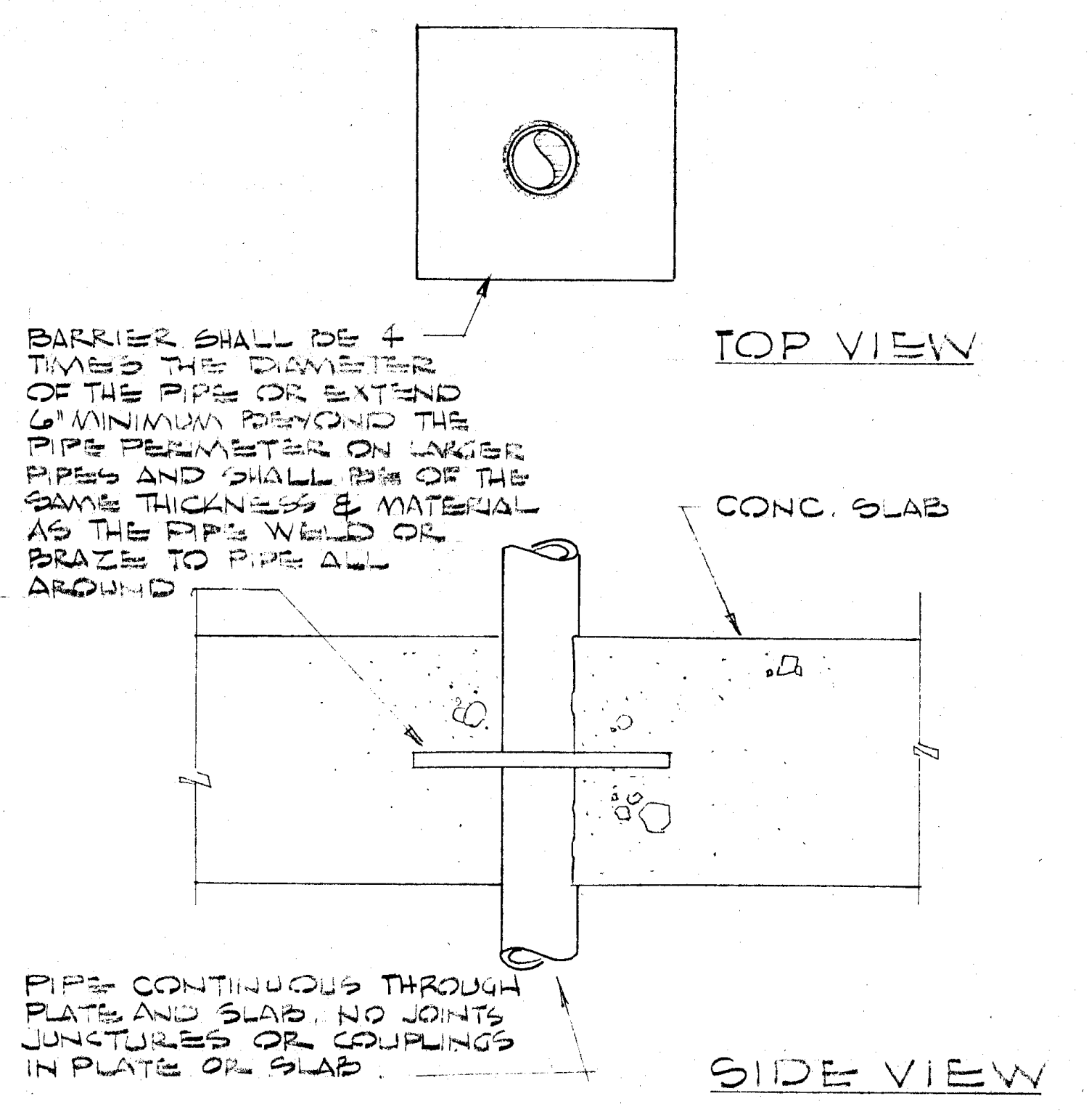
TOP VIEW
BARRIER SHALL BE 4 TIMES THE DIAMETER OF THE PIPE OR EXTEND 6" MINIMUM BEYOND THE PIPE PERIMETER ON LARGER PIPES AND SHALL BE OF THE SAME THICKNESS & MATERIAL AS THE PIPE WELD OR BRAZE TO PIPE ALL AROUND
CONC. SLAB
PIPE CONTINUOUS THROUGH PLATE AND SLAB. NO JOINTS JUNCTURES OR COUPLINGS IN PLATE OR SLAB.
SIDE VIEW

PIPE BARRIER DETAIL (L/M6)
NOT TO SCALE

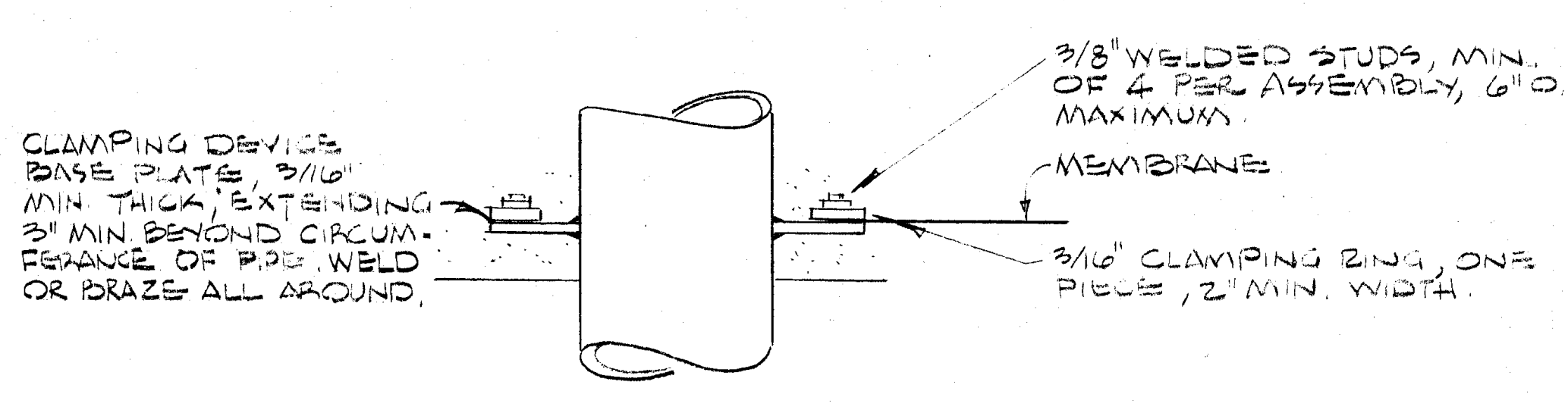
3/8" WELDED STUDS, MIN. OF 4 PER ASSEMBLY, 6" O.C. MAXIMUM.
MEMBRANE
CLAMPING DEVICE BASE PLATE, 3/16" MIN. THICK, EXTENDING 3" MIN. BEYOND CIRCUMFERANCE OF PIPE. WELD OR BRAZE ALL AROUND.
3/16" CLAMPING RING, ONE PIECE, 2" MIN. WIDTH.

NOTE: CLAMPING DEVICE SHALL BE OF THE SAME MATERIAL AS THE PIPE OR CONDUIT SERVED.

CLAMPING RING DETAIL (M/M6)
NOT TO SCALE

EMBARCADERO PLAZA
EMBARCADERO LOWER MARKET APPROVED REDEVELOPMENT PROJECT AREA E1

MECHANICAL DETAILS

SAN FRANCISCO REDEVELOPMENT AGENCY IN COOPERATION
WITH THE SAN FRANCISCO RECREATION AND PARK DEPARTMENT
AND SAN FRANCISCO DEPARTMENT OF PUBLIC WORKS

JOINT VENTURE ARCHITECTS:
LAWRENCE HALPRIN & ASSOCIATES
JOHN S. BOLLES ASSOCIATES
MARIO J. CIAMPI & ASSOCIATES

MECHANICAL AND ELECTRICAL ENG.
BEAMER • WILKINSON AND ASSO.
478 SANTA CLARA AVE.
OAKLAND, CALIF. 94610 PH. 415-834-4177

SCALE: AS NOTED
DATE: 25 JAN 1969
DRAWN BY: RC/VSD

M6

SHEET M6 OF 6

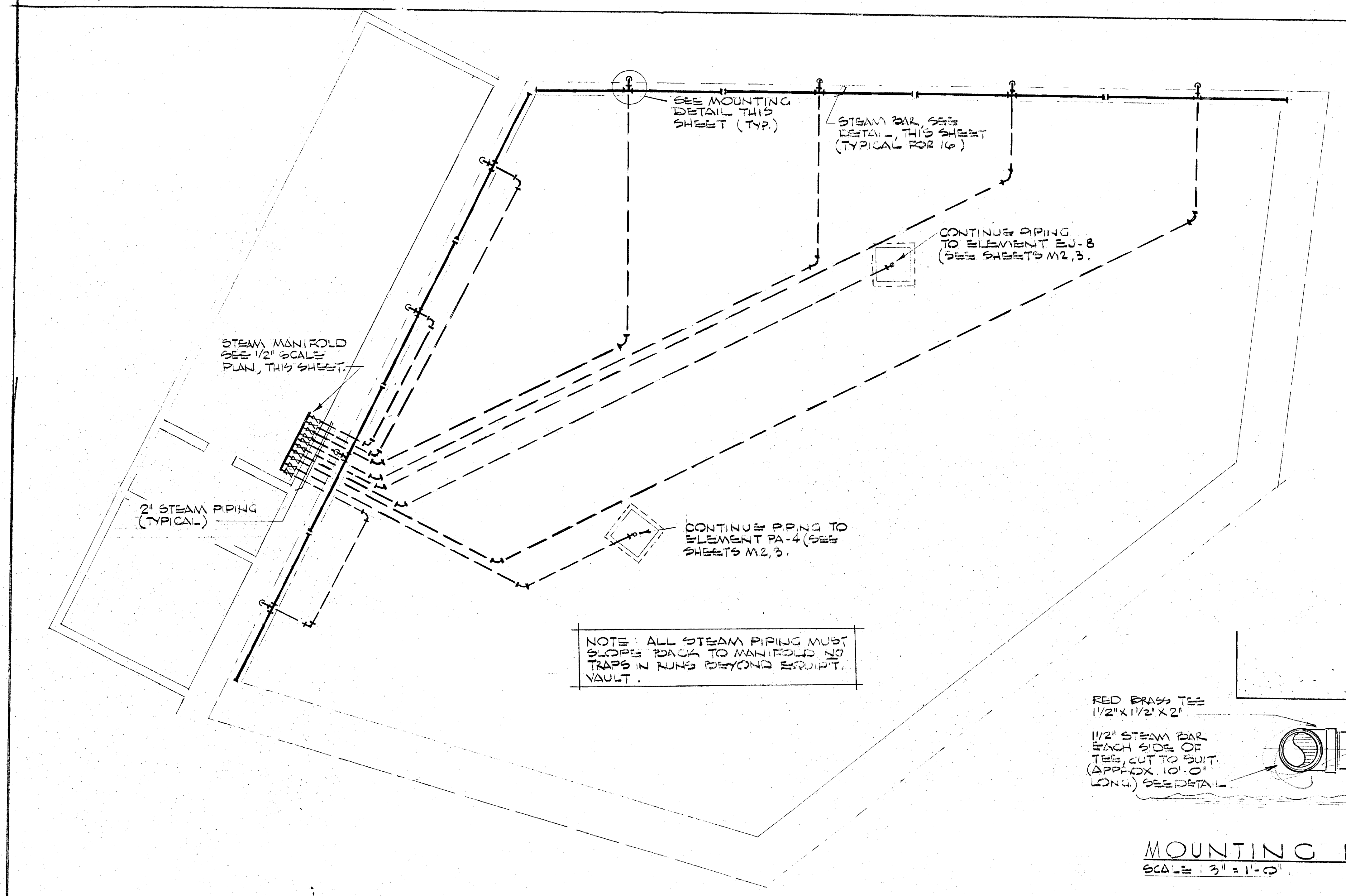
SEE MOUNTING DETAIL THIS SHEET (TYP.)
STEAM BAR, SEE DETAIL, THIS SHEET (TYPICAL FOR 16)
CONTINUE PIPING TO ELEMENT EJ-8 (SEE SHEETS M2,3.
STEAM MANIFOLD SEE 1/2" SCALE PLAN, THIS SHEET.
2" STEAM PIPING (TYPICAL)
CONTINUE PIPING TO ELEMENT PA-4 (SEE SHEETS M2,3.

NOTE: ALL STEAM PIPING MUST SLOPE BACK TO MANIFOLD NO TRAPS IN RUNS BEYOND EQUIP'T. VAULT.

STEAM PIPING PLAN
SCALE: 1/8" = 1'-0"

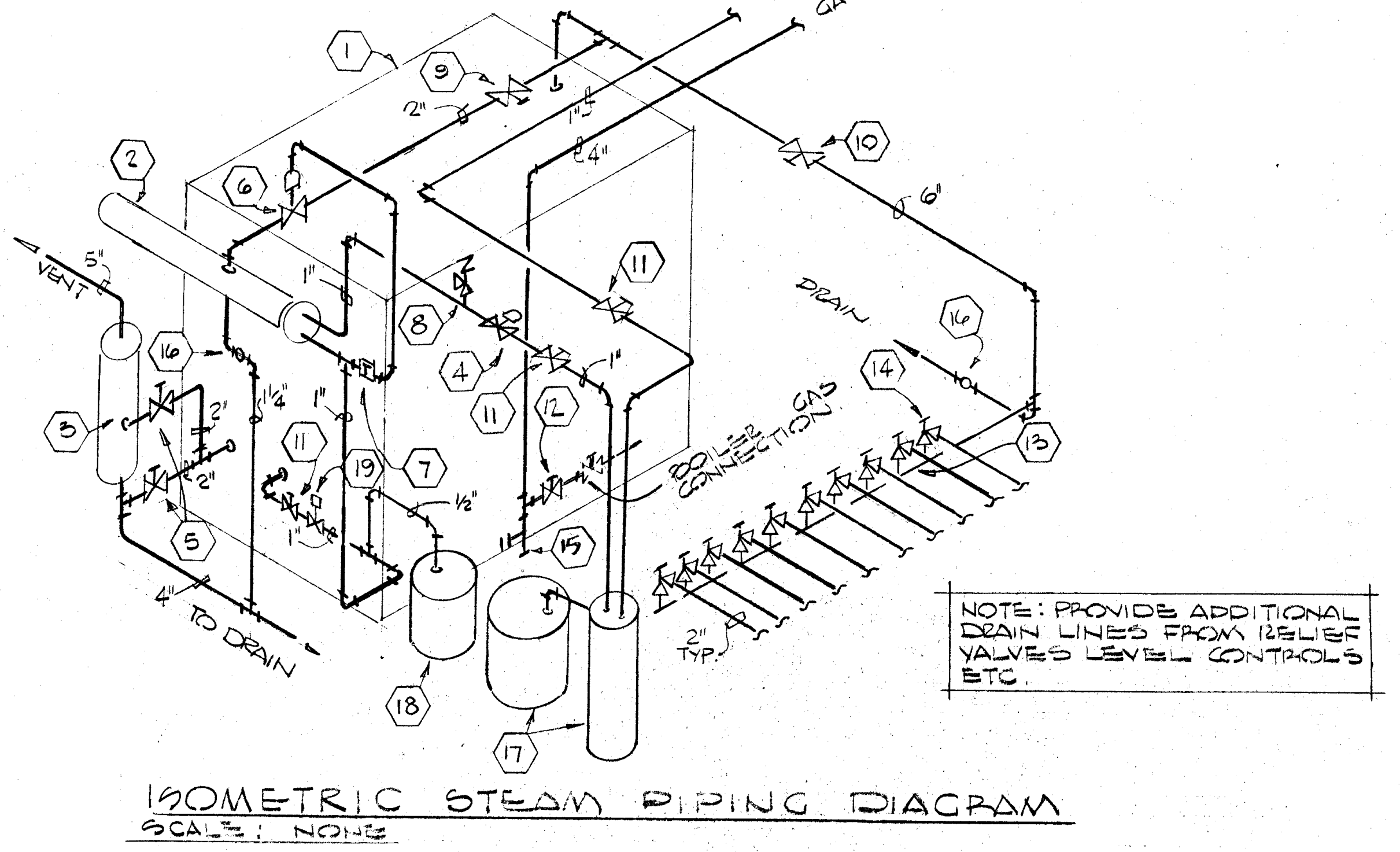
WATER
GAS
VENT
5"
2"
1"
4"
6"
1 1/4"
1/2"
DRAIN
BOILER CONNECTION
GAS
TO DRAIN
2" TYP.
1
2
3
4
5
6
7
8
9
10
11
12
13
14
15
16
17
18
19

NOTE: PROVIDE ADDITIONAL DRAIN LINES FROM RELIEF VALVES LEVEL CONTROLS ETC.

ISOMETRIC STEAM PIPING DIAGRAM
SCALE: NONE

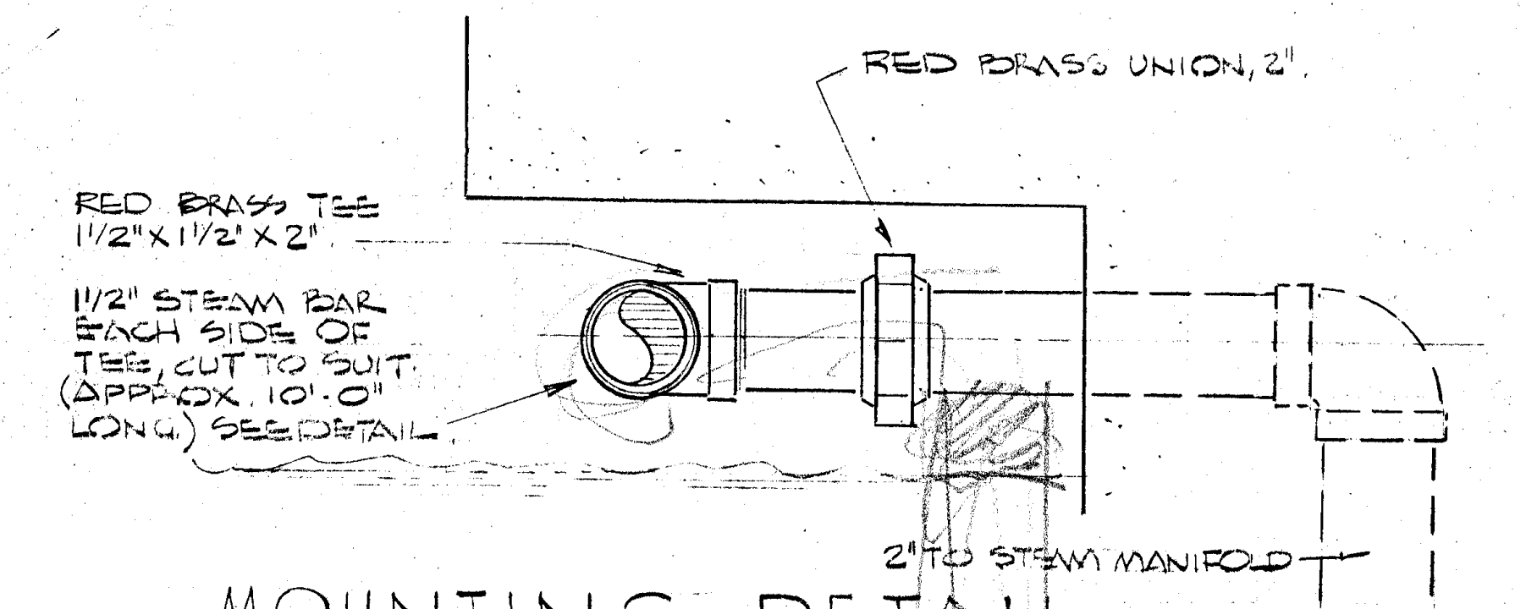
RED BRASS UNION, 2".
RED BRASS TEE 1 1/2" X 1 1/2" X 2"
1 1/2" STEAM BAR EACH SIDE OF TEE, CUT TO SUIT (APPROX. 10'-0" LONG) SEE DETAIL
2" TO STEAM MANIFOLD

MOUNTING DETAIL
SCALE: 3" = 1'-0"

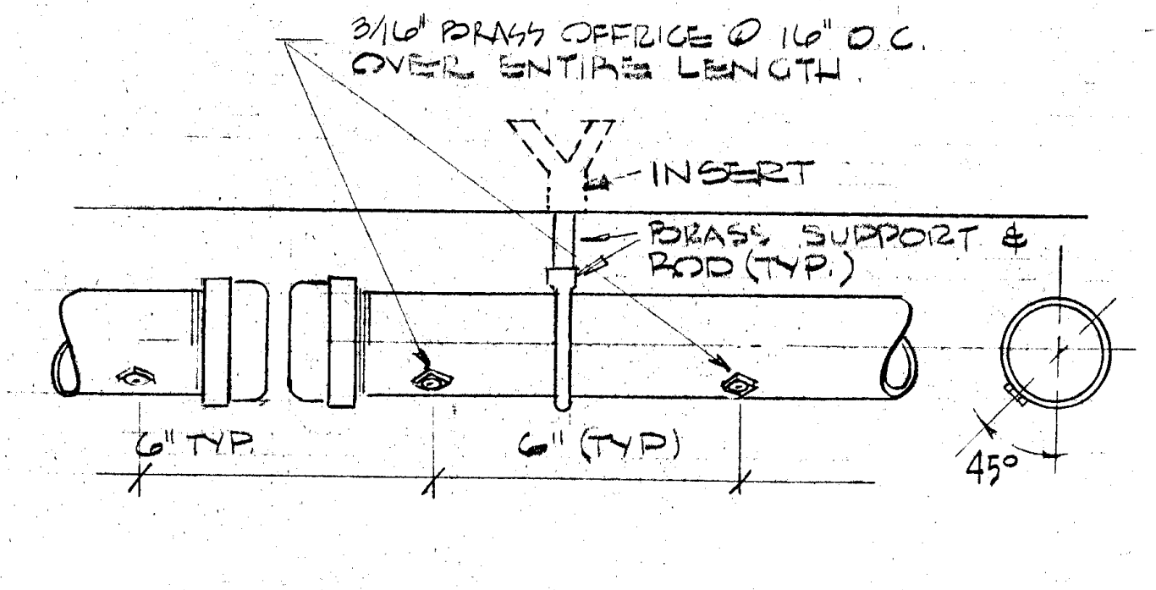
3/16" BRASS OFFRICE @ 16" O.C. OVER ENTIRE LENGTH.
INSERT
BRASS SUPPORT & ROD (TYP.)
6" TYP.
6" (TYP)
45°

STEAM BAR DETAIL
SCALE: 3" = 1'-0"

NUMBERED NOTES

1. ⟨1⟩ LOW PRESSURE STEAM BOILER 3500,000 BTUH INPUT, 2,800,000 BTUH OUTPUT, FORCED DRAFT, AJAX #SGX 3,500 OR APPROVED EQUAL (SEE SPECS)
2. ⟨2⟩ HEAT EXCHANGER BELL AND GOSSETT # SU64-6 OR APPROVED EQUAL.
3. ⟨3⟩ STEAM SEPARATOR, WILSON #77UM OR APPROVED EQUAL.
4. ⟨4⟩ PRESSURE REDUCING VALVE, BAILEY # 30 OR APPROVED EQUAL 1" (10 P.S.I.)
5. ⟨5⟩ BLOW DOWN AND DRAIN VALVES. 2" GATE,
6. ⟨6⟩ TEMPERATURE CONTROLLED STEAM REGULATING VALVE 2", SPENCE TYPE E2T124.
7. ⟨7⟩ TEMPERATURE SENSOR.
8. ⟨8⟩ RELIEF VALVE @ 15 P.S.I. 1".
9. ⟨9⟩ STEAM SHUT OFF VALVE 2" GATE.
10. ⟨10⟩ STEAM SHUT OFF VALVE, 6" GATE
11. ⟨11⟩ WATER SHUT OFF VALVE 1".
12. ⟨12⟩ GAS SHUTOFF, 4" LUBRICATED PLUG COCK.
13. ⟨13⟩ STEAM SYSTEM MANIFOLD 6" SIMILAR TO FILTER MANIFOLD DETAIL B SHEET M6.
14. ⟨14⟩ STEAM BALANCING VALVE, 2" ANGLE (TYPICAL FOR 10)
15. ⟨15⟩ MUD LEG W/PLUG FOR GAS LINE.
16. ⟨16⟩ DRIP TRAP ASSEMBLY
17. ⟨17⟩ WATER SOFTENER - L.A. WATER CONDITIONING INC. "FULLMATIC" MODEL F4C OR APPROVED EQUAL.
18. ⟨18⟩ PACKAGED CHEMICAL FEED UNIT, R.F. MAC DONALD CO. "DYNA MAC" SYSTEMS MODEL S 30 GAL. TANK 1/15 HP PUMP WITH PUMP SUCTION TUBING INCLUDING FOOT VALVE, PUMP DISCHARGE TUBING AND FITTINGS DISSOLVING BASKET AND LOW LEVEL SWITCH.
19. ⟨19⟩ FEEDWATER CONTROL SOLENOID VALVE CLAYTON NO/ 136 E OR APPROVED EQUAL.

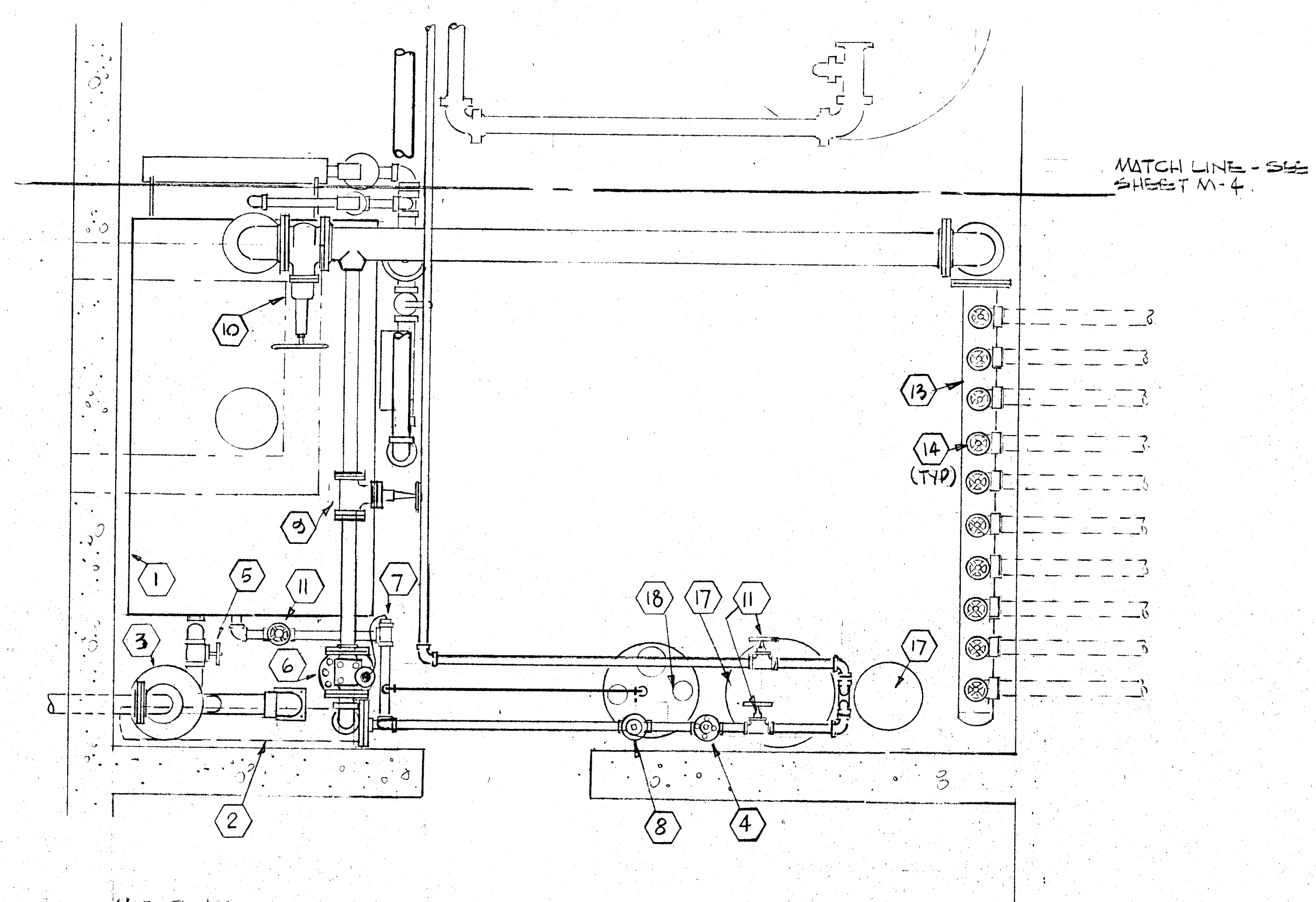
MATCH LINE - SEE SHEET M-4.
1
2
3
4
5
6
7
8
9
10
11
13
14 (TYP)
17
18

MECHANICAL VAULT PLAN - WEST END
SCALE: 1/2" = 1'-0"

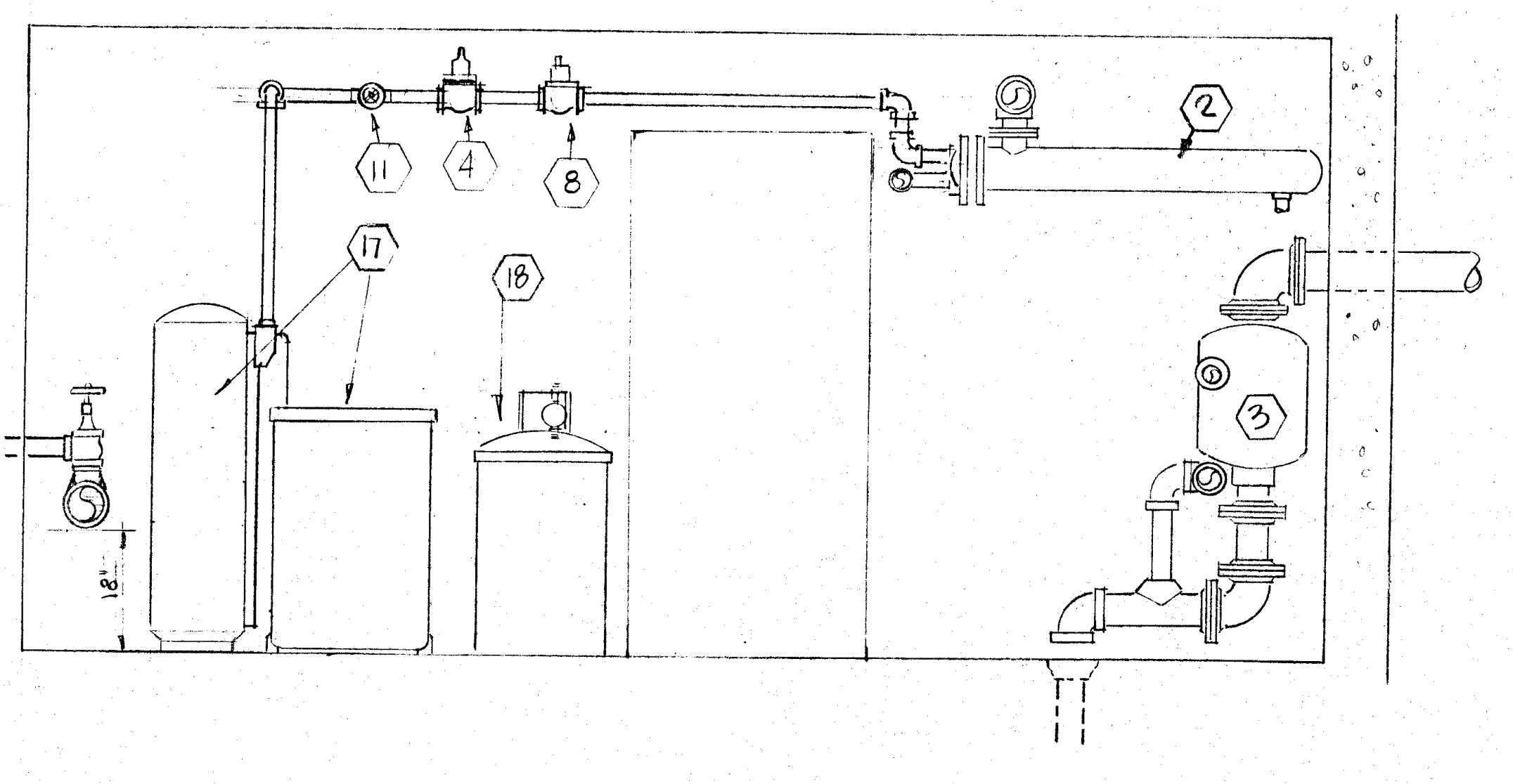
2
3
4
8
11
17
18
12"

ELEVATION WEST WALL - MECH VAULT
SCALE 1/2" = 1'-0"

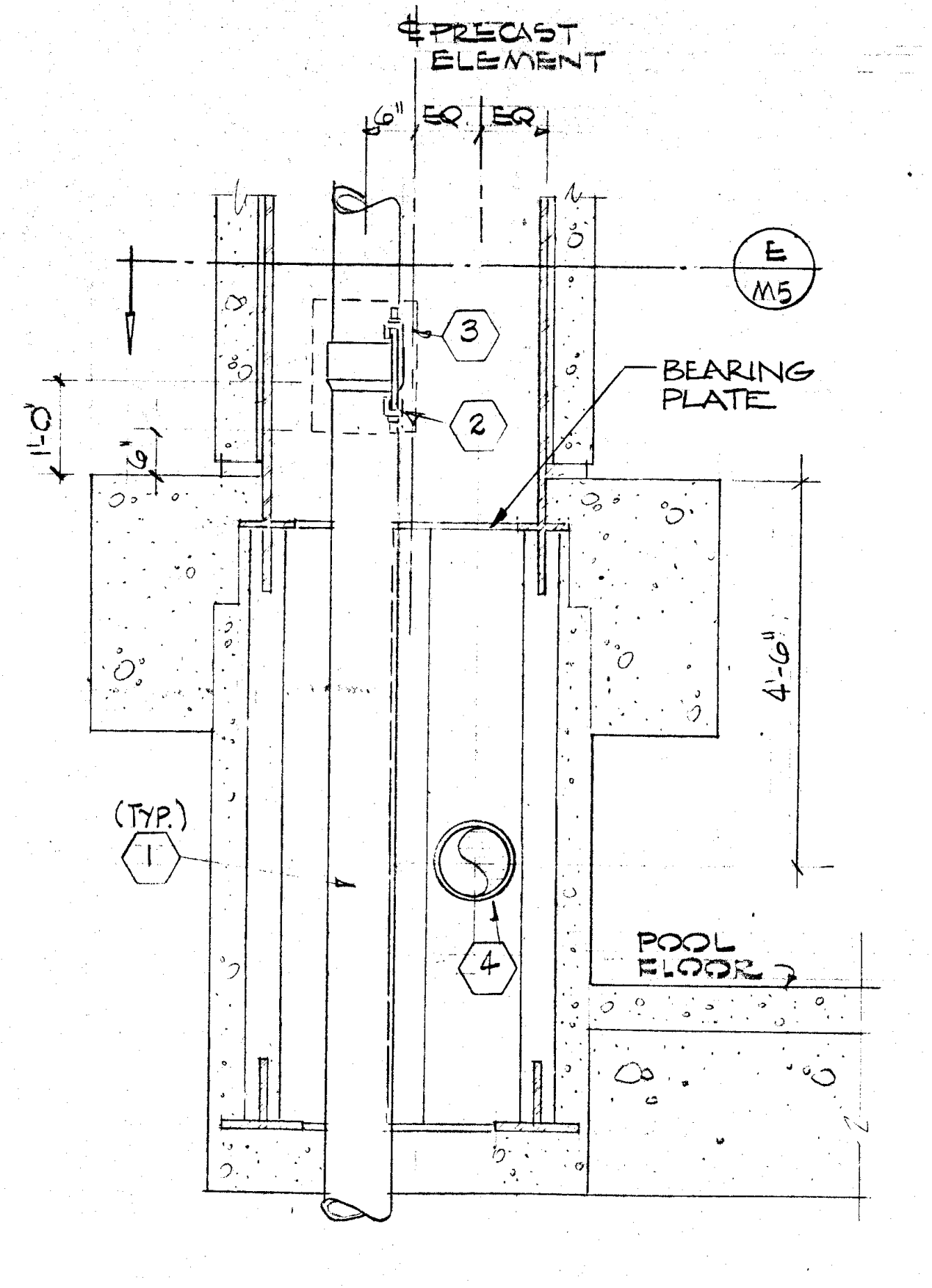
℄ PRECAST ELEMENT
6" EQ. EQ.
E M5
3
2
BEARING PLATE
1'-0"
4'-6"
(TYP.) 1
4
POOL FLOOR

TYPICAL BASE CONNECTION (A/M5)
SCALE: 1/2" = 1'-0"

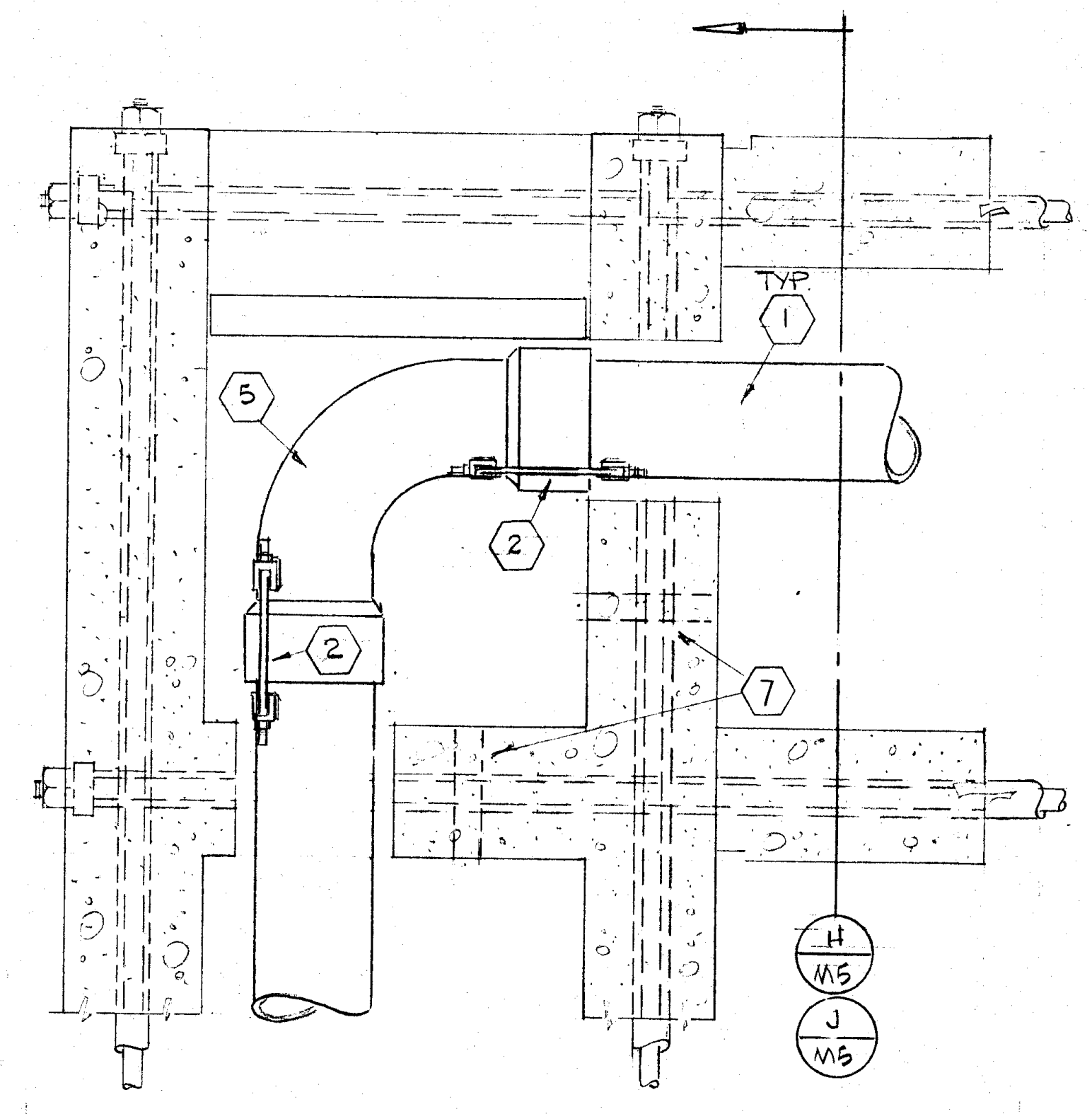
TYP. 1
5
2
7
H M5
J M5

ELEVATION @ CONCRETE LINER WEB (B/M5)
SCALE: 1" = 1'-0"

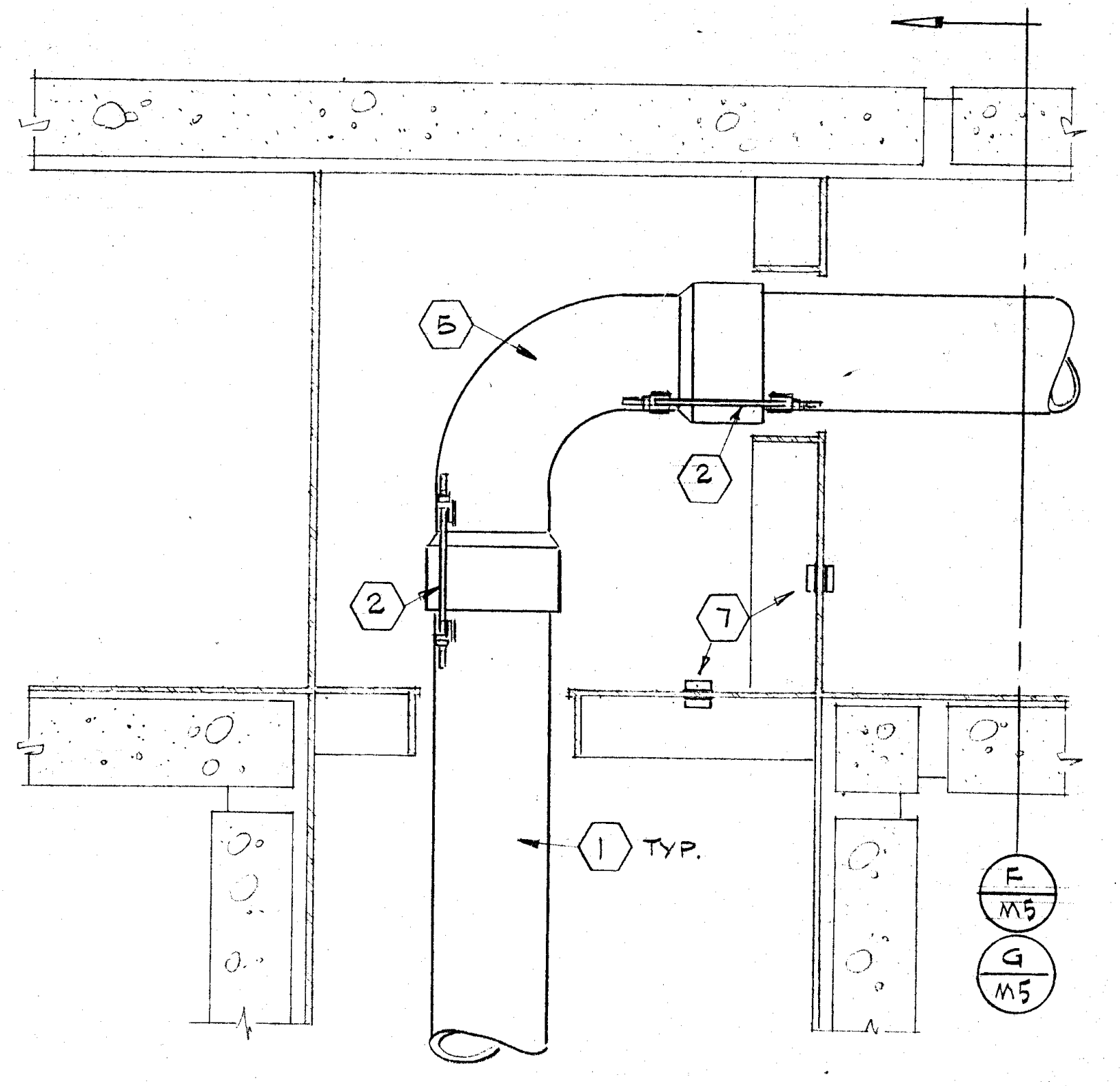
5
2
7
1 TYP.
F M5
G M5

ELEVATION @ STEEL LINER WEB (C/M5)
SCALE: 1" = 1'-0"

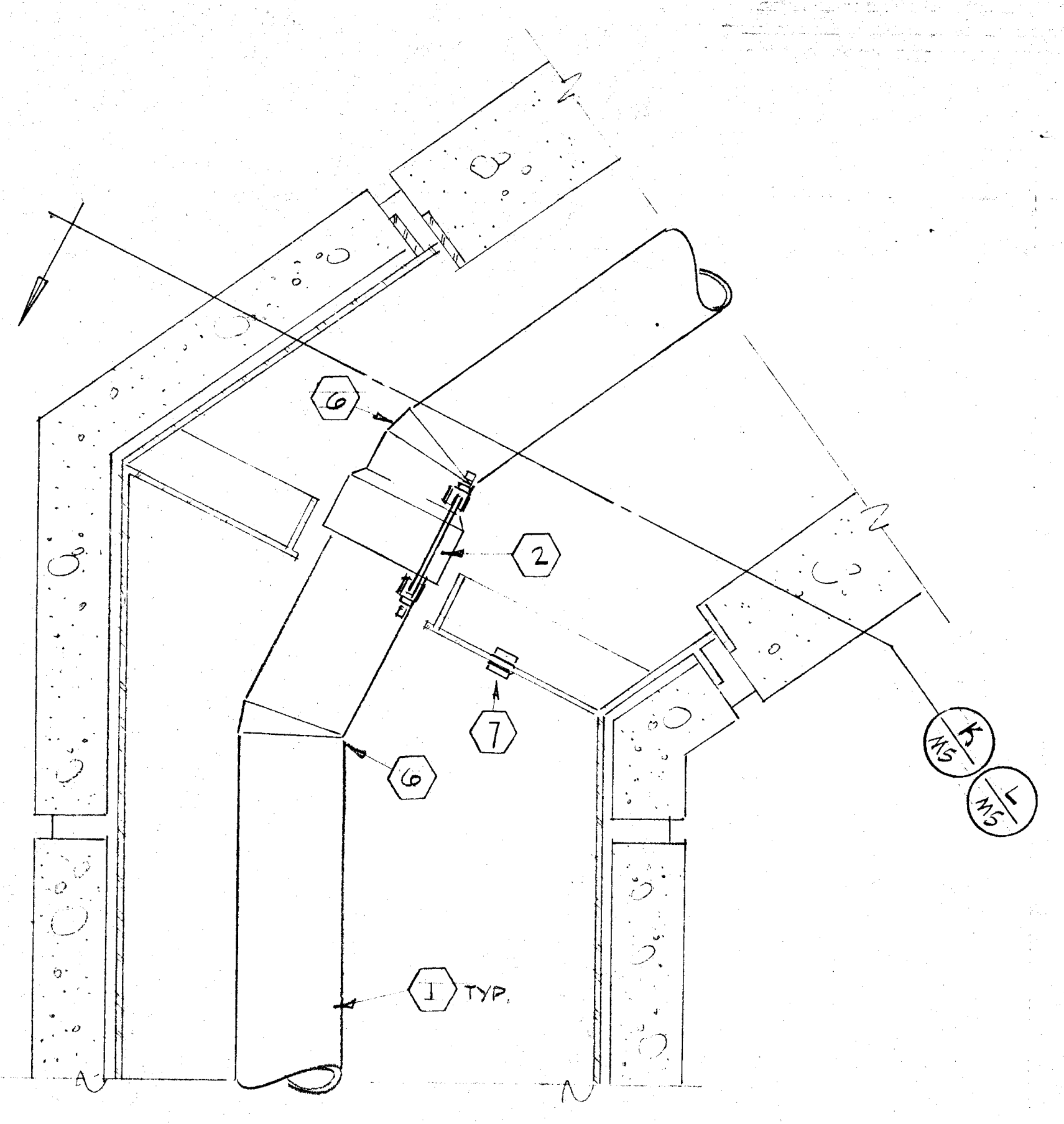
6
2
7
1 TYP.
K M5
L M5

ELEVATION @ STIFFENER (D/M5)
SCALE: 1" = 1'-0"

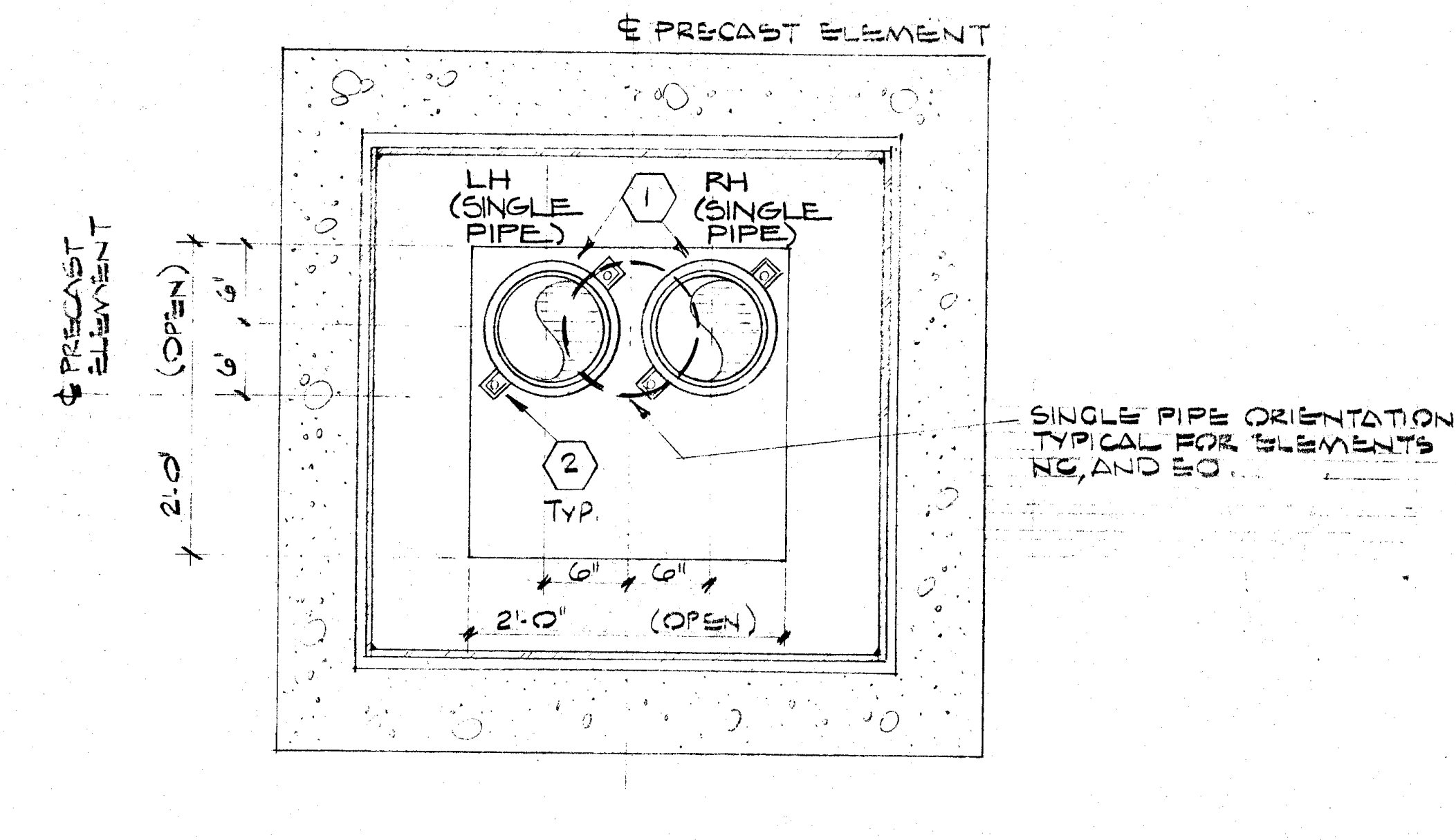
℄ PRECAST ELEMENT
LH (SINGLE PIPE)
RH (SINGLE PIPE)
1
2 TYP.
℄ PRECAST ELEMENT
(OPEN)
6" 6"
2'-0"
6" 6"
2'-0" (OPEN)
SINGLE PIPE ORIENTATION TYPICAL FOR ELEMENTS NC, AND EO.

SECTION @ BEARING PLATE (E/M5)
SCALE: 1" = 1'-0"

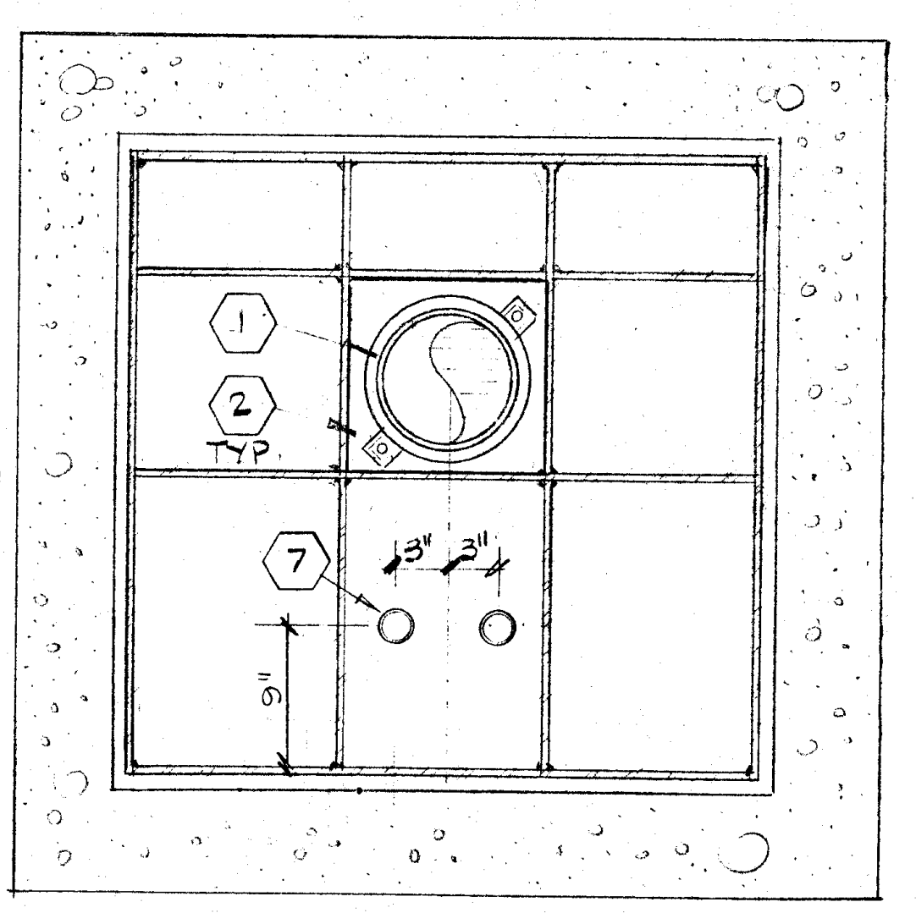

FOR PIPE LOCATION DIMENSIONS SEE DETAIL H, THIS SHEET.

SECTION @ STEEL LINER WEB - ONE PIPE (F/M5)
SCALE: 1" = 1'-0"

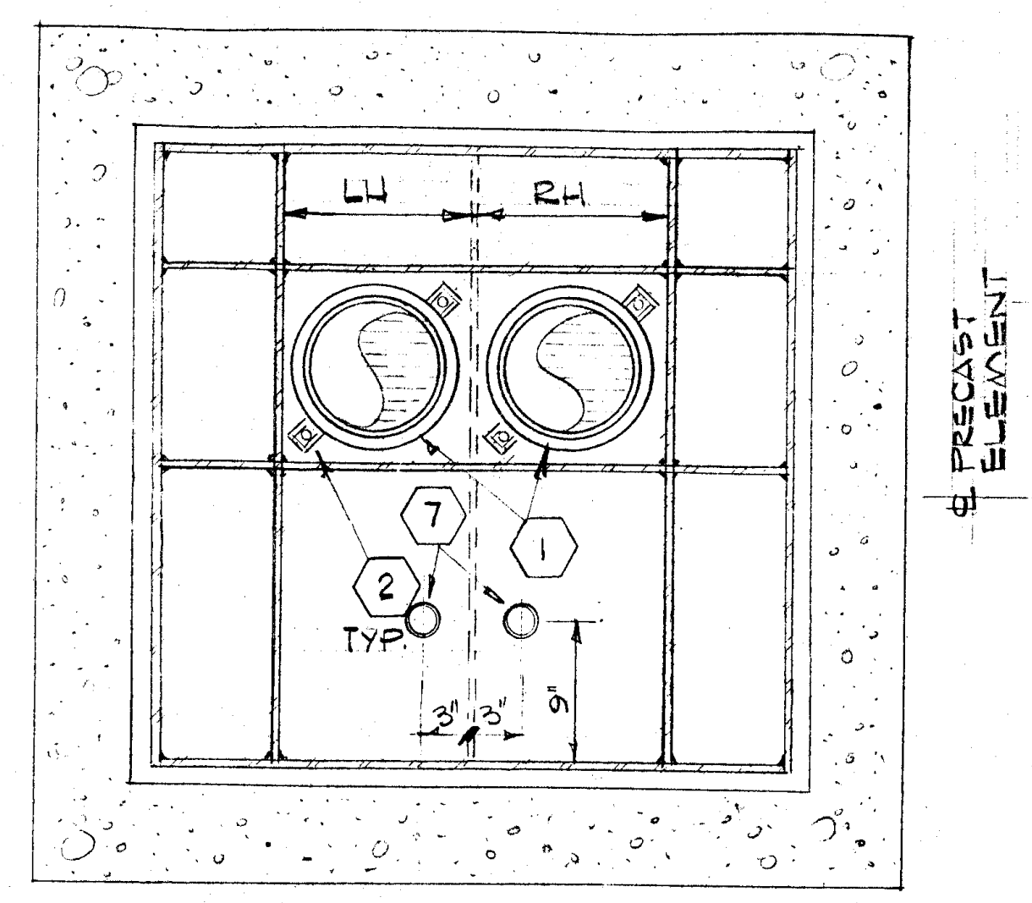
LH
RH
2
7
1
2 TYP.
3" 3"
9"

FOR PIPE LOCATION DIMENSIONS SEE DETAIL J, THIS SHEET.

SECTION @ STEEL LINER WEB TWO PIPES (G/M5)
SCALE: 1" = 1'-0"

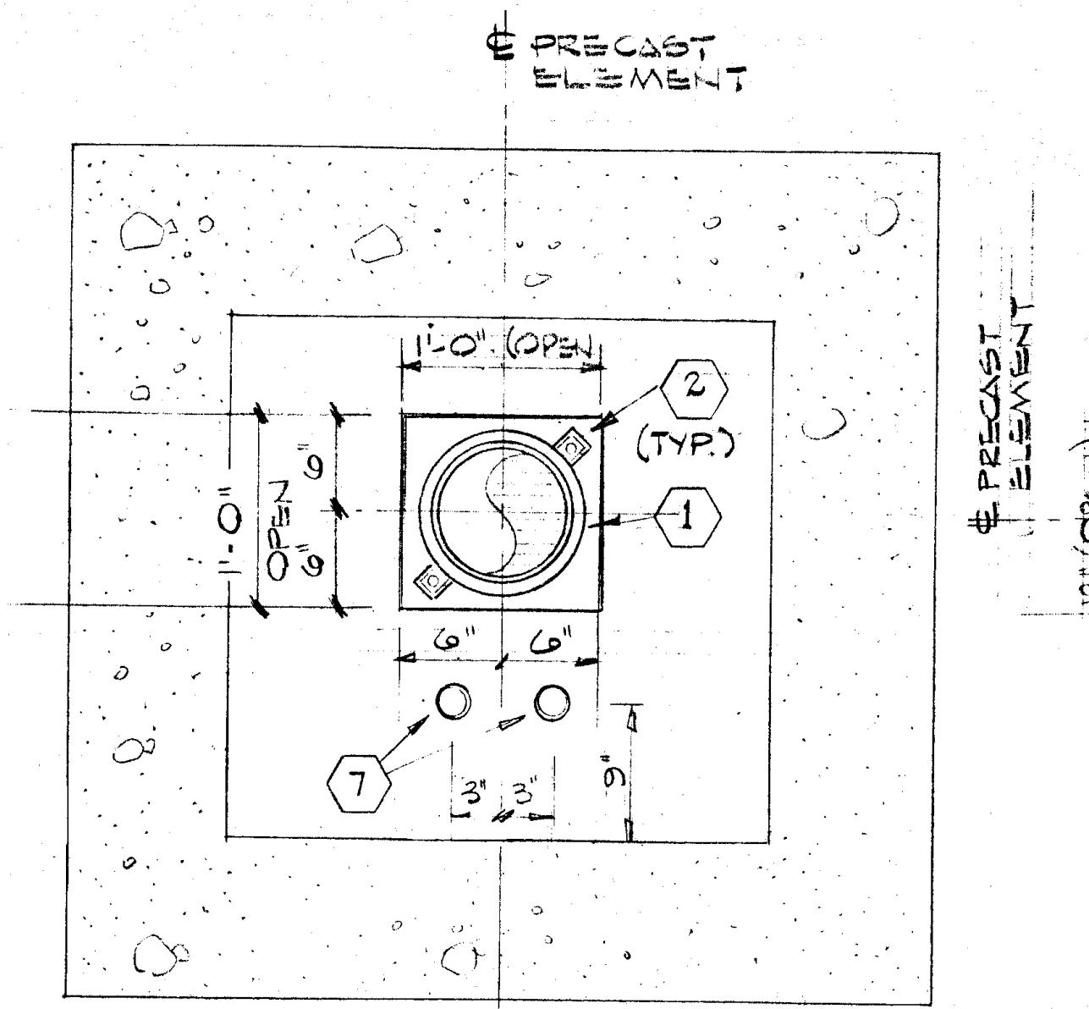
℄ PRECAST ELEMENT
1'-0" (OPEN)
2 (TYP.)
1
℄ PRECAST ELEMENT
1'-0" OPEN
6" 6"
7
3" 3"
9"

DIMENSIONS ARE TYPICAL FOR DETAILS F&H

SECTION @ CONCRETE WEB ONE PIPE (H/M5)
SCALE: 1" = 1'-0"

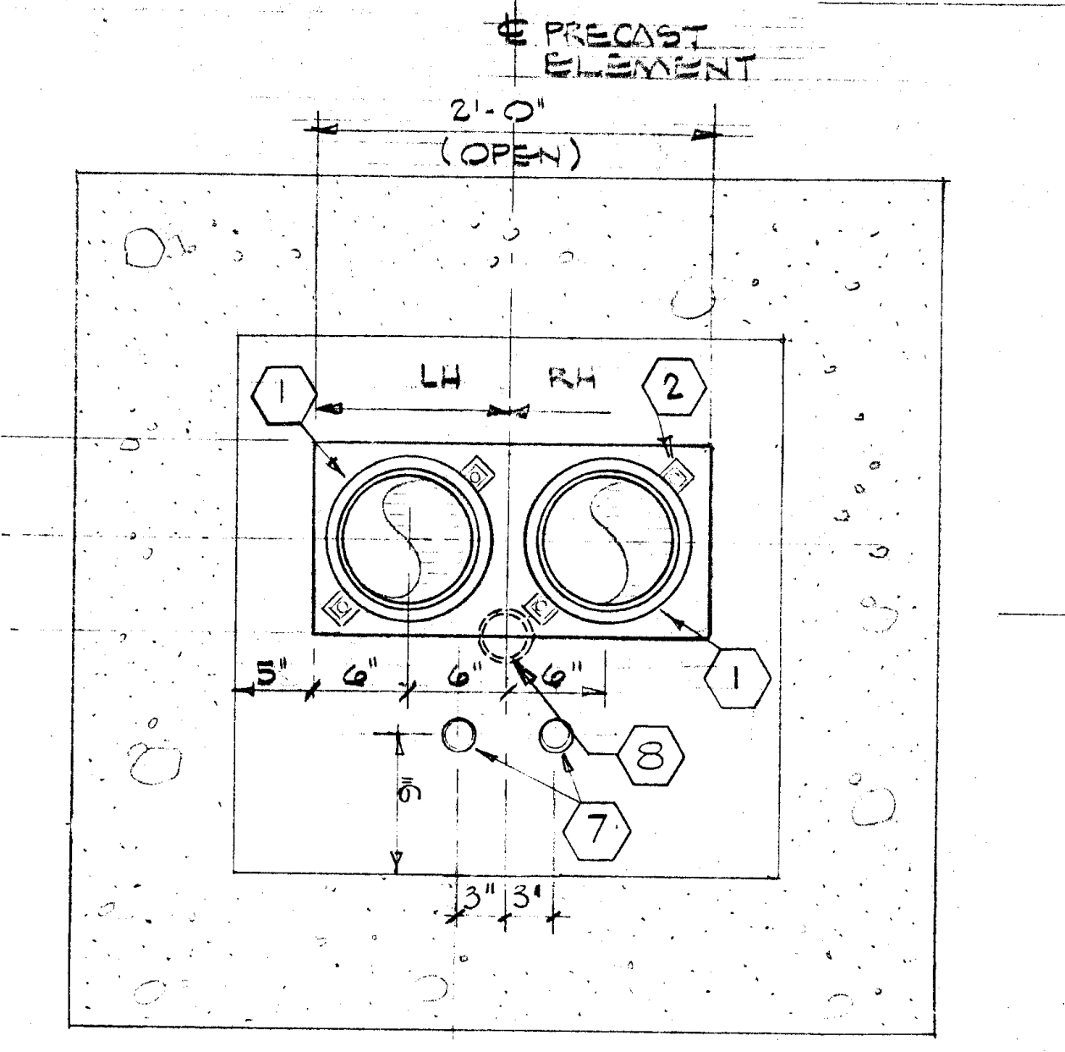
℄ PRECAST ELEMENT
2'-0" (OPEN)
LH
RH
1
℄ PRECAST ELEMENT
12" (OPEN)
6"
3" 6" 6" 6" 6" 3"
8
7
9"
3" 3"

DIMENSIONS ARE TYPICAL FOR DETAILS G&J.

SECTION @ CONCRETE WEB TWO PIPES (J/M5)
SCALE: 1" = 1'-0"

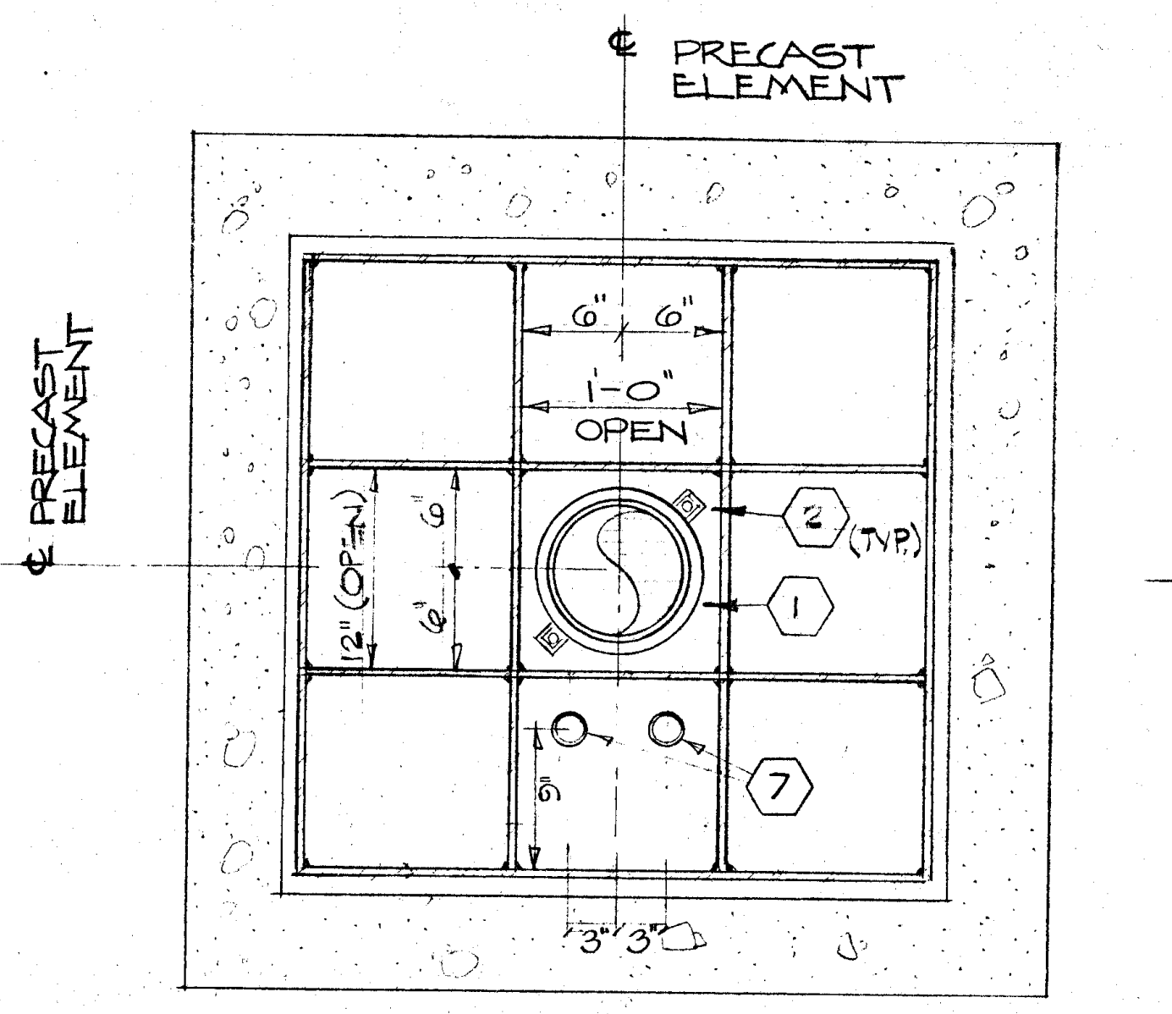
℄ PRECAST ELEMENT
6" 6"
1'-0" OPEN
2 (TYP)
1
℄ PRECAST ELEMENT
12" (OPEN)
7
9"
3" 3"

SECTION @ STIFFENER PLATE ONE PIPE (K/M5)
SCALE: 1" = 1'-0"

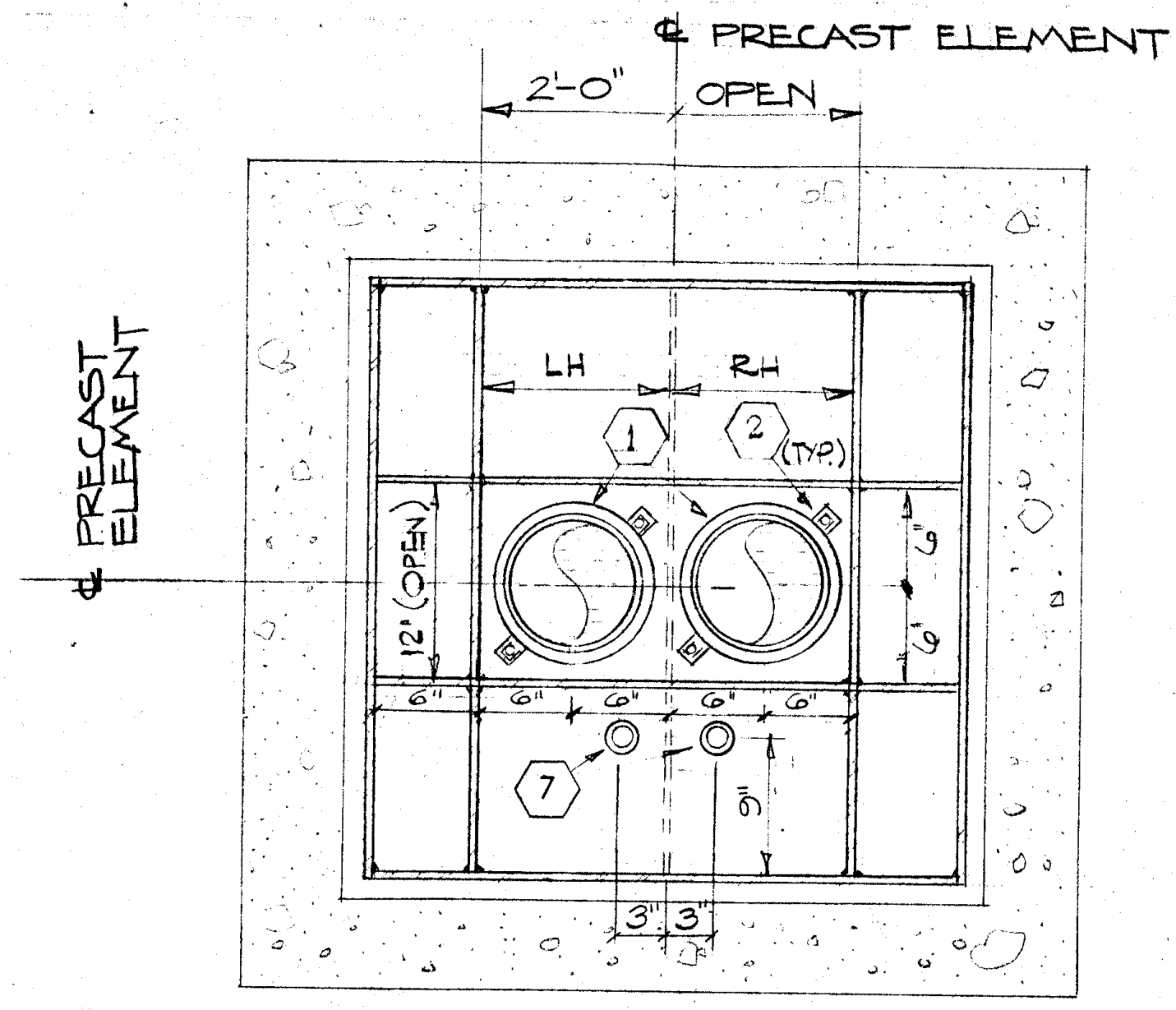
2'-0"
℄ PRECAST ELEMENT
OPEN
LH
RH
1
2 (TYP)
℄ PRECAST ELEMENT
12" (OPEN)
6" 6" 6" 6"
7
9"
3 3

SECTION @ STIFFENER PLATE TWO PIPES (L/M5)
SCALE: 1" = 1'-0"

NUMBERED NOTES

1. ⟨1⟩ 8" FIBERGLAS PIPING · SEE SPECIFICATION
2. ⟨2⟩ JOINT HARNESS - SEE SPECIFICATIONS.
3. ⟨3⟩ 14" X 18" WINDOW - TYP. FOR BOTH SIDES OF ELEMENT.
4. ⟨4⟩ 8" CONTINUOUS PIPE MANIFOLD - SEE SPECIFICATION
5. ⟨5⟩ 90° FIBERGLAS ELL
6. ⟨6⟩ 27 1/2° MITERED BEND.
7. ⟨7⟩ 1 1/4" SLEEVE FOR CONDUIT 3" MINIMUM LONG.
8. ⟨8⟩ CAST-IN 3" SLEEVE FOR BUBBLER PIPING ELEMENTS EH, NH, EN AND NK. HORIZONTAL WEB ONLY.

EMBARCADERO PLAZA
EMBARCADERO LOWER MARKET APPROVED REDEVELOPMENT PROJECT AREA E1

SCALE: AS SHOWN
DATE: JAN. 25, 1969
DRAWN BY: RC/YSD

SAN FRANCISCO REDEVELOPMENT AGENCY IN COOPERATION
WITH THE SAN FRANCISCO RECREATION AND PARK DEPARTMENT
AND SAN FRANCISCO DEPARTMENT OF PUBLIC WORKS

JOINT VENTURE ARCHITECTS:
LAWRENCE HALPRIN & ASSOCIATES
JOHN S. BOLLES ASSOCIATES
MARIO J. CIAMPI & ASSOCIATES

M5

SHEET M5 OF 6

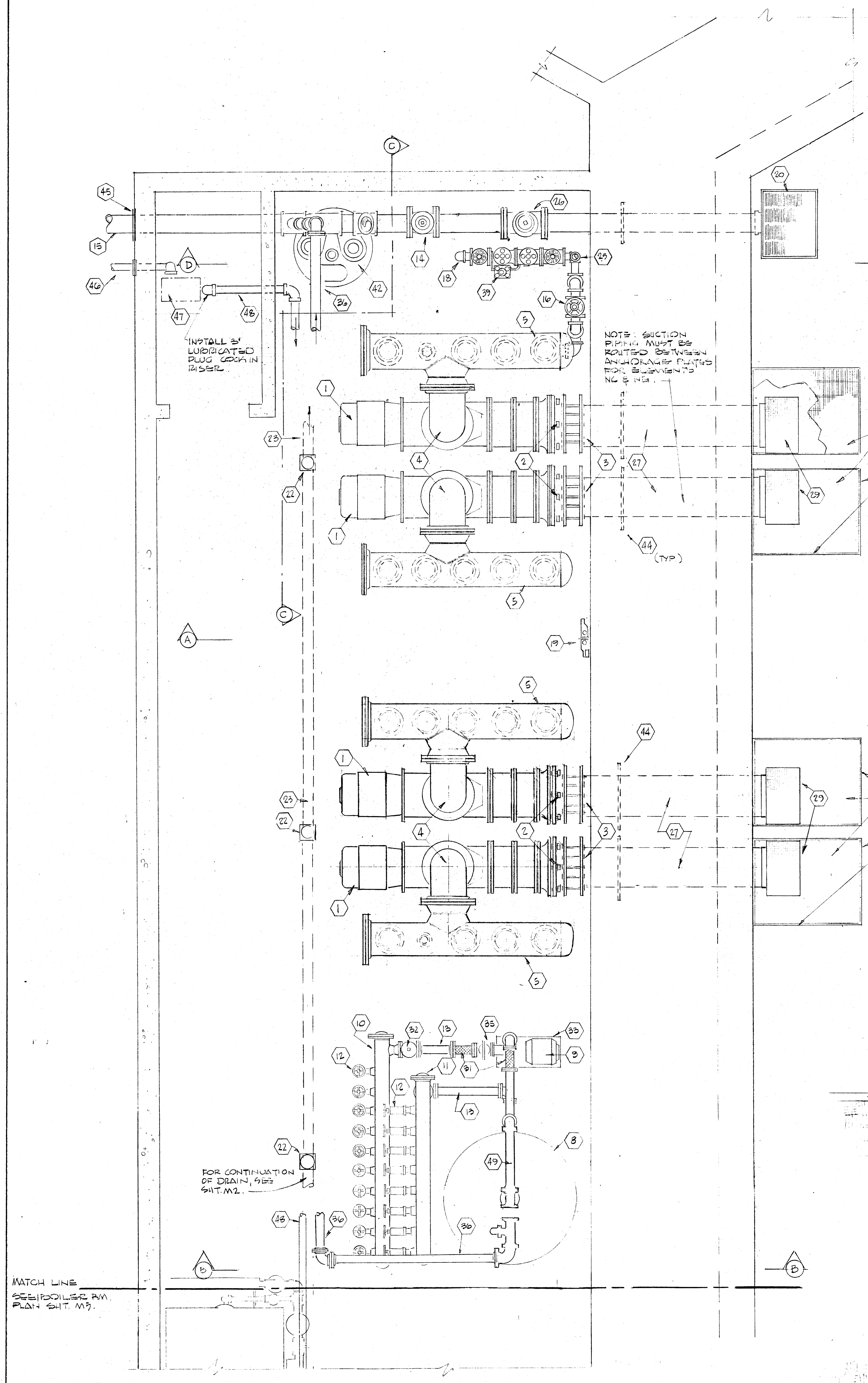
"INSTALL 3" LUBRICATED PLUG COCK IN RISER"
NOTE: SUCTION PIPING MUST BE ROUTED BETWEEN ANCHORAGE FOOTINGS FOR ELEMENTS NC & NG.
(TYP.)
FOR CONTINUATION OF DRAIN, SEE SHT. M2.
MATCH LINE SEE BOILER RM. PLAN SHT. M3.
A
B
C
D

MECHANICAL VAULT PLAN
SCALE: 1/2" = 1'-0"

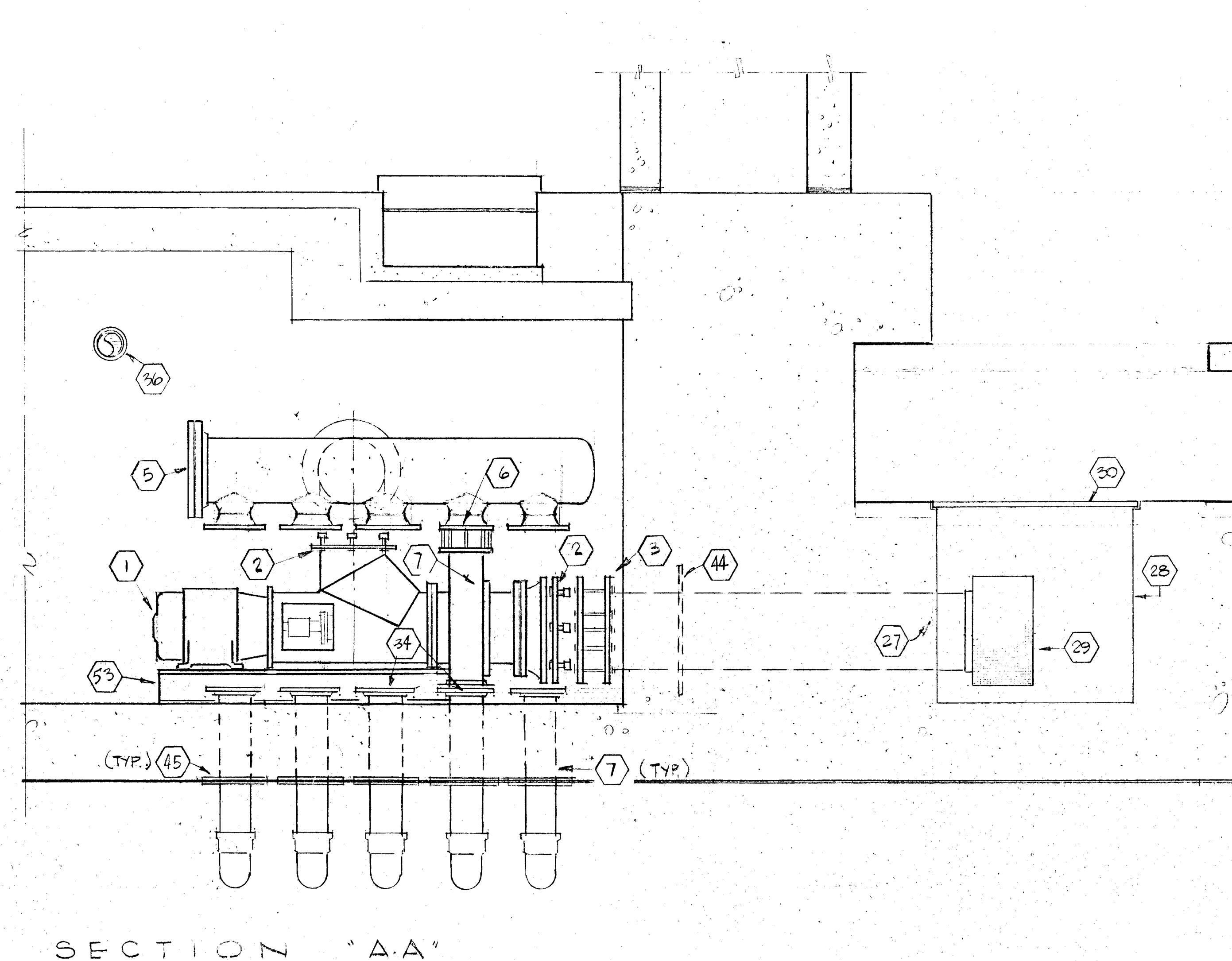

SECTION "A-A"
SCALE: 1/4" = 1'-0"

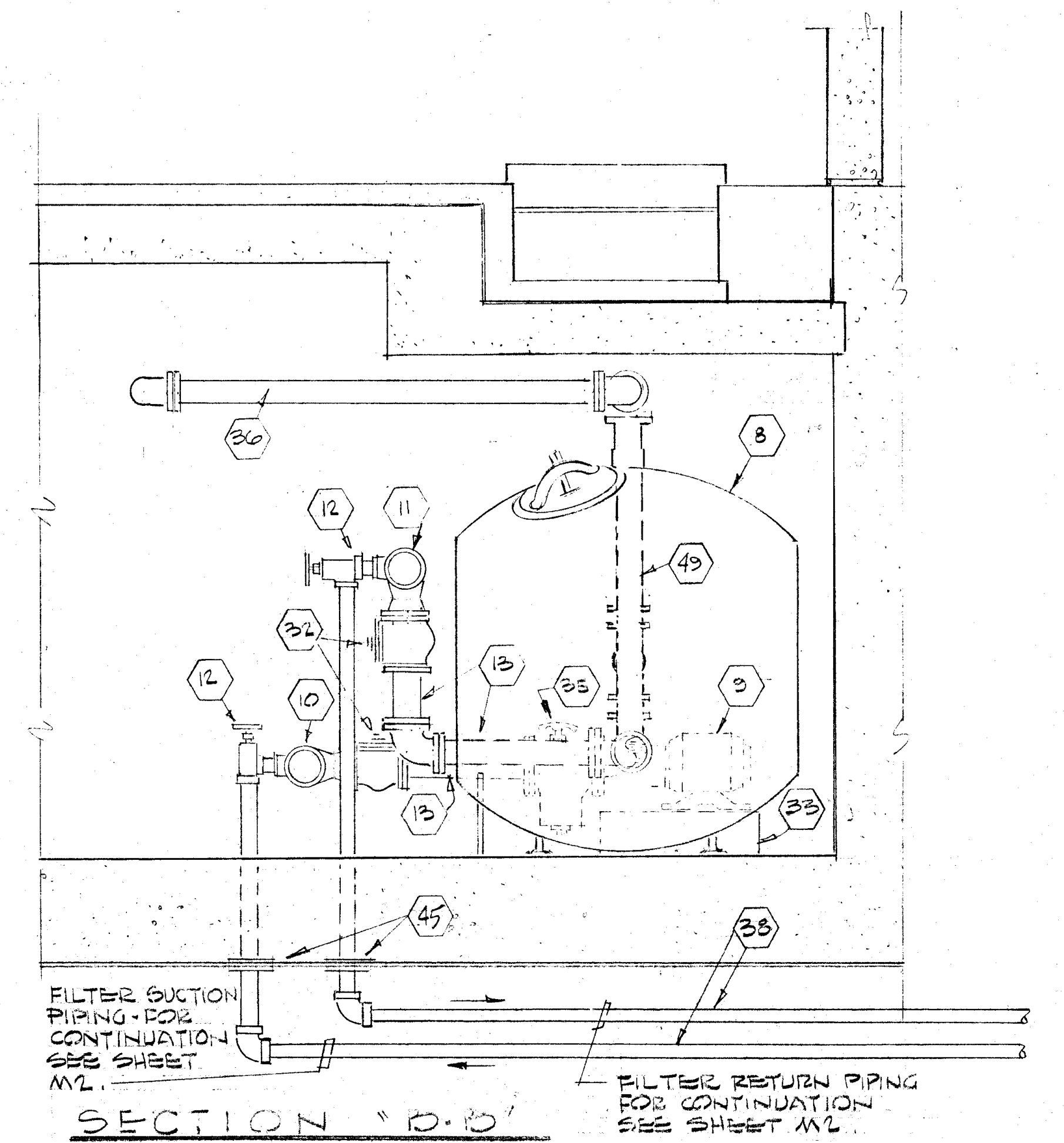
FILTER SUCTION PIPING - FOR CONTINUATION SEE SHEET M2.
FILTER RETURN PIPING FOR CONTINUATION SEE SHEET M2.

SECTION "B-B"
SCALE: 1/2" = 1'-0"

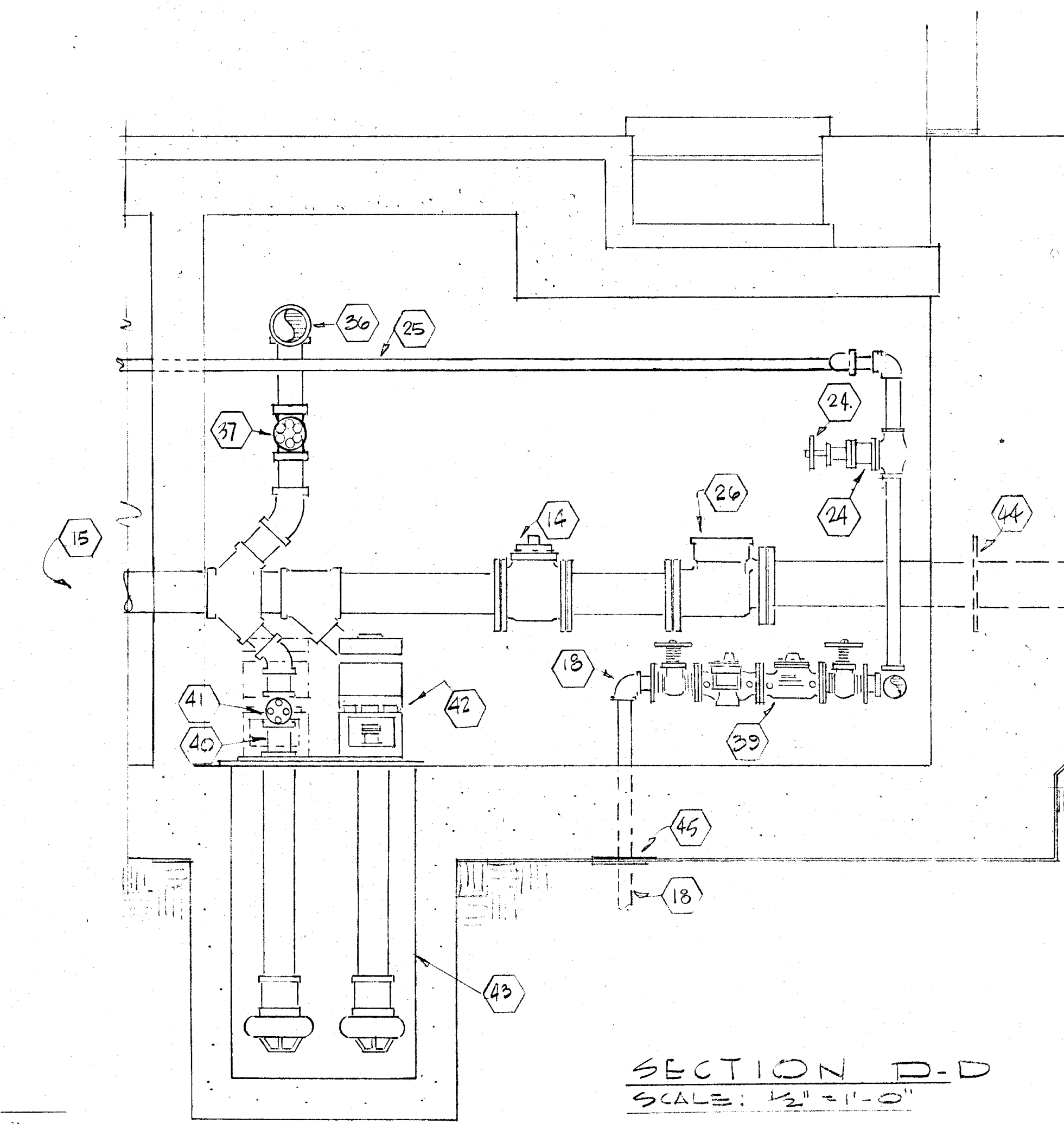

SECTION D-D
SCALE: 1/2" = 1'-0"

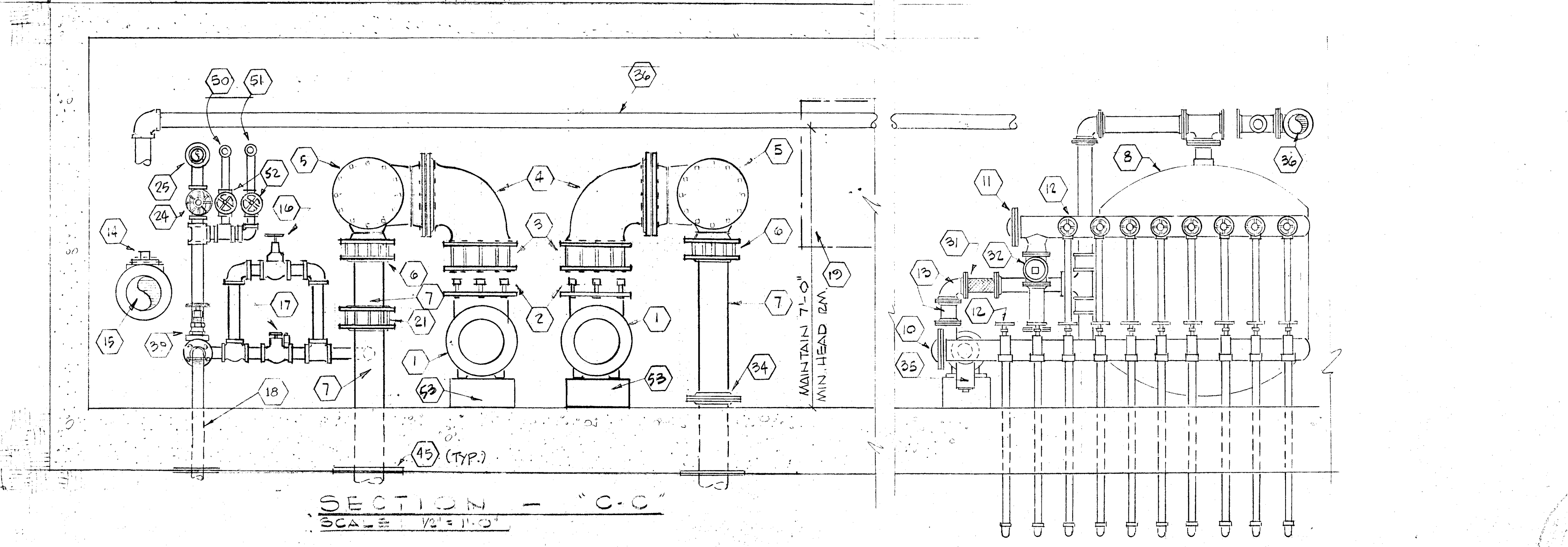

SECTION - "C-C"
SCALE: 1/2" = 1'-0"

PIPING MATERIALS

1) UNDERGROUND PIPING FOR ELEMENTS AND PIPING WITHIN THE ELEMENTS SHALL BE OF PLASTIC REINFORCED MORTAR "TECHITE" BY UTC CORP (SEE SPECS)
2) UNDERGROUND PIPING FOR FILTER SYSTEM SHALL BE TYPE "K" COPPER OR RED BRASS.
3) EXPOSED PIPING IN VAULT SHALL BE:
   a) TYPE "K" COPPER OR RED BRASS FOR 3" AND SMALLER
   b) WROUGHT IRON WITH CAST IRON FITTINGS FOR SIZES 4" AND LARGER. FOR ELEMENT PIPING EXTEND TO AND INCLUDE ELBOWS BEYOND VAULT.
4) DOMESTIC WATER SUPPLY PIPING SHALL BE TYPE "K" COPPER OR RED BRASS.
5) UNDERGROUND DRAIN PIPING SHALL BE CAST IRON, BELL AND SPIGOT OR MECHANICAL JOINT.
6) EXPOSED DRAIN PIPING SHALL BE CAST IRON, MECHANICAL JOINT.

PIPING NOTES

1) PIPING MATERIALS ARE OPTIONAL ONLY INSOFAR AS SPACE OR DISASSEMBLY REQUIREMENTS ALLOW. WHEREVER PLANS, ELEVATION OR DETAILS CLEARLY INDICATE SPECIFIC MATERIALS OR METHODS OF JOINING, THE CONTRACTOR MUST SECURE WRITTEN PERMISSION FROM THE ARCHITECT OR ENGINEER TO DEVIATE FROM THIS SCHEME.
2) ONLY ONE TYPE OF PIPING WITHIN EACH CATEGORY LISTED ABOVE MAY BE USED ON THIS PROJECT EXCEPT FOR EQUIP'T. VAULT PIPING WHICH MAY BE A MIXTURE AS DICTATED BY WELDING REQUIREMENTS.
3) WROUGHT IRON OR CAST IRON SCREWED JOINTS SHALL BE CAST IRON (DURHAM)
4) WHERE FERROUS AND NONFERROUS METALLIC PIPES ARE JOINED, PROVIDE DIELECTRIC UNIONS.
5) PIPING IN PARALLEL OR CROSSING SHALL HAVE A 3" CLEARANCE TO OTHER PIPING (METALLIC OR NON-METALLIC.) WHERE PIPING MUST BE LOCATED IN CLOSER PROXIMITY W/OTHER PIPING, METHOD OF INSTALLATION MUST BE APPROVED BY ARCH.
6) PROVIDE 1-COAT RUST INHIBITING PRIMER AND 2-COATS DUPONT PONKOTE ENAMEL FOR ALL PIPING, VALVES AND EQUIP'T. DO NOT PAINT NAMEPLATES.

NUMBERED NOTES

(1) RECIRCULATING PUMP - 7500 GPM @ 34' TDH 18" SUCTION, 18" DISCHARGE, 75 HP, 3φ, 480V. MOTOR
(2) FLANGED COUPLING ADAPTER, 18"
(3) BUTTERFLY VALVE, 18" W/ GEAR OPERATOR
(4) FLANGED ELBOW, 18"
(5) PUMPING MANIFOLD, 18" SEE DETAIL A SHT M6.
(6) BUTTERFLY VALVES - 18 - 8" AND 2 - 3".
(7) 8" PIPING TO ELEMENTS
(8) HIGH RATE SAND FILTER, 293 GPM FLOW RATE 19.5 SQ.FT. AREA WITH FACE PIPING, VALVES, GAUGES AND SIGHT GLASS AS SHOWN, SEE SPECS.
(9) FILTER PUMP 5HP 480V. 3φ SEE SPEC'S.
(10) FILTER SYSTEM SUCTION MANIFOLD - SEE DETAIL B SHEET M6
(11) FILTER SYSTEM DISCHARGE MANIFOLD - SEE DETAIL B SHEET M6
(12) 1 1/2" ANGLE VALVE
(13) FILTER SYSTEM PIPING, 4" (TYP.)
(14) 8" PLUG VALVE (DRAIN) ROCKWELL - NORDSTROM FIG. 143
(15) 8" PIPING TO SEWER (SEE SHT. ME - 1)
(16) 3" GATE VALVE (FILL)
(17) 2" SOLENOID VALVE (MAKE-UP)
(18) 3" PIPING TO DOMESTIC WATER (SEE SHT. ME - 1)
(19) WATER LEVEL CONTROLS - SEE DETAIL C SHT. M6.
(20) 8" DRAIN JOSAM #0380-1-YY
(21) 8" SPLIT DISC CHECK VALVE (FILL LINE ONLY)
(22) 3" FLOOR DRAIN SIMILAR TO DETAIL G SHT. M6.
(23) 6" DRAIN PIPE TO SUMP.
(24) 3" GATE VALVE FOR IRRIGATION SYSTEM (SEE SH. ME-1)
(25) 3" STUB-OUT FOR IRRIGATION SYSTEM (SEE SH. ME-1)
(26) BACKWATER VALVE, JOSAM #1100F, 8".
(27) 18" SUCTION PIPING
(28) 31'-10" × 6'-10" SUMP - SEE STRUCTURAL PLAN
(29) 18" BASKET STRAINER, TUTTLE MFG. CO. CAST BRONZE, 26" O.D. 13 1/2" OVERALL HT.
(30) SUMP GRATING 4'-0" × 3'-0" FABRICATED BRASS DONICO INC #. D26-B.
(31) FLEXIBLE COUPLING "KEFLEX" TYPE 1-145, 4"
(32) LUBRICATED PLUG VALVE, 4" ROCKWELL NORDSTROM, FIG. 143.
(33) CONC. BLOCK FOR PUMP MOUNTING - CHECK W/ PUMP MFGR. FOR MTG. INFO.
(34) FLANGE @ FLOOR TO FACILITATE PUMP REMOVAL (TYP. FOR 10)
(35) FILTER PUMP HAIR & LINT FILTER - NORCAL #30-150-80S
(36) FILTER BACKWASH PIPING, 4"
(37) CHECK VALVE, 4"
(38) FILTER PIPING 1 1/2" (TYP)
(39) BACKFLOW PREVENTER, CLAYTON MODEL RP, 3"
(40) 2 1/2" PUMP DISCHARGE PIPING.
(41) 2 1/2" CHECK VALVE
(42) DUPLEX SUMP PUMP ASSEMBLY, PACIFIC PUMPING CO. TYPE NAD W/ 2 - 2 1/2" AR PUMPS 6 1/4" IMPELLER, 2HP 3φ 480V. MOTOR, 150 GPM @ 15' TDH EACH.
(43) 36"φ × 5'-0" DEEP SUMP (SEE STRUCTURAL SHEETS)
(44) BARRIER PLATE - SEE DETAIL "L" SHEET M6.
(45) MEMBRANE CLAMPING RING - SEE DETAIL M SHEET M6
(46) 3" GAS SERVICE LINE - BY P.G.&E.
(47) GAS METER - BY P.G.&E.
(48) 3" GAS PIPING TO BOILER
(49) FILTER FACE PIPING (INTEGRAL WITH FILTER)
(50) 1" BOILER FEEDWATER LINE
(51) 1" LINE FOR STREET WASHER BOXES.
(52) 1" GATE VALVE
(53) CHANNEL BASE FOR PUMPS - SEE SPEC'S FOR MT'G.

EMBARCADERO PLAZA
EMBARCADERO LOWER MARKET APPROVED REDEVELOPMENT PROJECT AREA E1

PUMPING VAULT PLAN AND SECTIONS

SAN FRANCISCO REDEVELOPMENT AGENCY IN COOPERATION
WITH THE SAN FRANCISCO RECREATION AND PARK DEPARTMENT
AND SAN FRANCISCO DEPARTMENT OF PUBLIC WORKS

JOINT VENTURE ARCHITECTS:
LAWRENCE HALPRIN & ASSOCIATES
JOHN S. BOLLES ASSOCIATES
MARIO J. CIAMPI & ASSOCIATES

MECHANICAL AND ELECTRICAL ENG.
BEAMER • WILKINSON AND ASSO.
478 SANTA CLARA AVE
OAKLAND, CALIF. 94610 415-834-4177

SCALE: AS NOTED
DATE: 25 JAN. 69
DRAWN BY: RC/VSD

M4

SHEET M4 OF 6

PIPING IS TERMINATED 1'-0" BEYOND FINAL PENETRATION OR 6" MIN BEYOND FINAL SUPPORT (TYP)
PIPE SUPPORT (TYP) SEE DETAIL K, SHT. M6
3" RED BRASS PIPING
8" PIPING IS R.H. ORIENTATION IN ELEMENT "EO" 3" PIPING IN CENTER OF ELEMENT "EM".
3" RED BRASS PIPING
SIM.
RH
LH
M5

ELEVATION "A-A"
SCALE: 1/4" = 1'-0"
ELEMENT "EG"

ELEVATION "B-B"
SCALE: 1/4" = 1'-0"
ELEMENT "EF"

ELEVATION "C-C"
SCALE: 1/4" = 1'-0"
ELEMENTS "EH & NH"

ELEVATION "D-D"
SCALE: 1/4" = 1'-0"
ELEMENT "EJ"

ELEVATION "E-E"
SCALE: 1/4" = 1'-0"
ELEMENT "EN"

ELEVATION "F-F"
SCALE: 1/4" = 1'-0"
ELEMENT "EO"

ELEVATION "Z-Z"
SCALE: 1/4" = 1'-0"

ELEVATION "H-H"
SCALE: 1/4" = 1'-0"
ELEMENT "NK"

ELEVATION X-X
SCALE: 1/4" = 1'-0"

ELEVATION "I-I"
SCALE: 1/4" = 1'-0"
ELEMENT "NL"

ELEVATION W-W
SCALE: 1/4" = 1'-0"

ELEVATION "J-J"
SCALE: 1/4" = 1'-0"
ELEMENT PA

ELEVATION V-V
SCALE: 1/4" = 1'-0"

ELEVATION "G-G"
SCALE: 1/4" = 1'-0"
ELEMENT "NC"

ELEVATION Y-Y
SCALE: 1/4" = 1'-0"

NOTE: SEE SHEET # M2 FOR PIPING PLAN; SHEET M5 FOR PIPING DETAILS; SHEET # 10 FOR SCULPTURE ELEMENT ISOMETRICS, SHEETS S3 THRU S8 FOR STRUCTURAL DETAILS

Ⓢ DENOTES PIPE SUPPORT - SEE DETAIL K, SHT. M6. WHERE TWO PIPES ARE PARALLEL SUPPORT FOR BOTH IS INDICATED. LOCATIONS ARE APPROXIMATE.

EMBARCADERO PLAZA

EMBARCADERO LOWER MARKET APPROVED REDEVELOPMENT PROJECT AREA E1

FOUNTAIN PIPING ELEVATIONS

SAN FRANCISCO REDEVELOPMENT AGENCY IN COOPERATION
WITH THE SAN FRANCISCO RECREATION AND PARK DEPARTMENT
AND SAN FRANCISCO DEPARTMENT OF PUBLIC WORKS

JOINT VENTURE ARCHITECTS:
LAWRENCE HALPRIN & ASSOCIATES
JOHN S. BOLLES ASSOCIATES
MARIO J. CIAMPI & ASSOCIATES

MECHANICAL AND ELECTRICAL ENGRS
BEAMER•WILKINSON AND ASSO.
478 SANTA CLARA AVE.
OAKLAND, CALIF. 94610 415.834-4177

SCALE: AS NOTED
DATE: 25 JAN 69
DRAWN BY: RC/VSD

M3

SHEET M3 OF 6

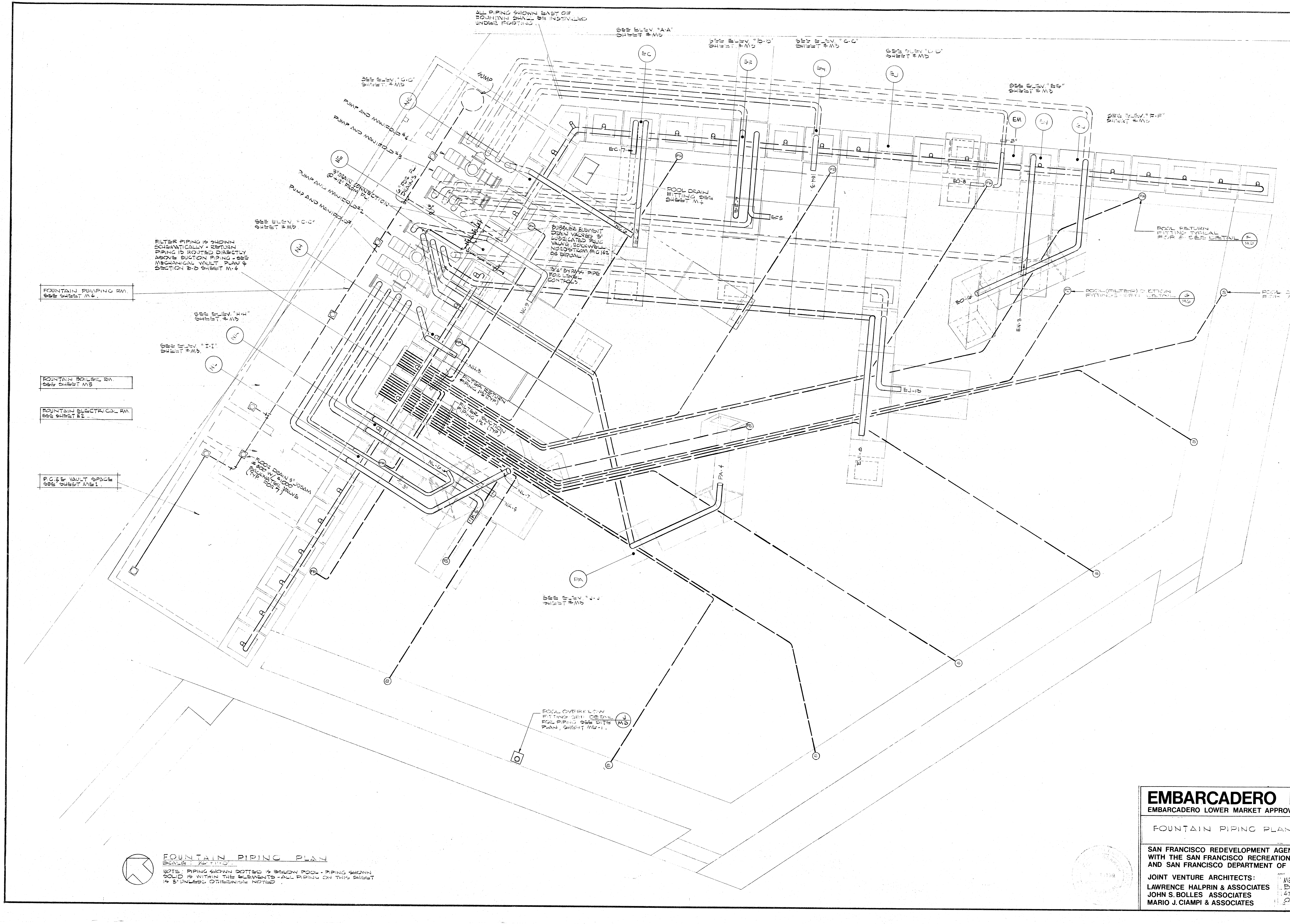
ALL PIPING SHOWN EAST OF FOUNTAIN SHALL BE INSTALLED UNDER FOOTING.
SEE ELEV. "A-A" SHEET #M3
SEE ELEV. "B-B" SHEET #M3
SEE ELEV. "C-C" SHEET #M3
SEE ELEV. "D-D" SHEET #M3
SEE ELEV. "E-E" SHEET #M3
SEE ELEV. "F-F" SHEET #M3
SEE ELEV. "G-G" SHEET #M3
EC
EF
EH
EJ
EM
EN
EO
SUMP
PUMP AND MANIFOLD #4
PUMP AND MANIFOLD #3
PUMP AND MANIFOLD #2
PUMP AND MANIFOLD #1
3" DRAIN CONNECTION @ 2" FROM FL.
SEE ELEV. "C-C" SHEET #M3
NH
FILTER PIPING IS SHOWN SCHEMATICALLY - RETURN PIPING IS ROUTED DIRECTLY ABOVE SUCTION PIPING - SEE MECHANICAL VAULT PLAN & SECTION B-B SHEET M-4
FOUNTAIN PUMPING RM. SEE SHEET M4.
SEE ELEV. "H-H" SHEET #M3
NK
SEE ELEV. "I-I" SHEET #M3.
NL
FOUNTAIN BOILER RM. SEE SHEET M5
FOUNTAIN ELECTRICAL RM. SEE SHEET E2
P.G.&E. VAULT SPACE SEE SHEET ME1.
FLOOR DRAIN 3" JOSAM #300 W/ #1000 BACKWATER VALVE (TYP. FOR 7)
POOL DRAIN FITTING SEE SHEET M4
BUBBLER ELEMENT DRAIN VALVES 3" LUBRICATED PLUG VALVE, ROCKWELL NORDSTROM FIG 142 OR EQUAL.
3/4" BYPASS PIPE FOR LEVEL CONTROLS.
EC-7
EC-6
EF-5
EO-8
EO-6
EN-3
EJ-13
EJ-8
NC-6
NC-9
NL-6
NL-7
NK-5
NH-3
PA-4
PA
FR
FS
S
POOL RETURN FITTING TYPICAL FOR 5 SEE DETAIL F/M6
POOL (FILTER) SUCTION FITTINGS SEE DETAIL G/M6
POOL SKIMMERS (TYPICAL FOR 7) SEE DETAIL E/M6
SEE ELEV. "J-J" SHEET #M3
POOL OVERFLOW FITTING SEE DETAIL J/M6 FOR PIPING SEE SITE PLAN, SHEET ME-1.

FOUNTAIN PIPING PLAN

SCALE: 1/4"=1'-0".

NOTE: PIPING SHOWN DOTTED IS BELOW POOL - PIPING SHOWN SOLID IS WITHIN THE ELEMENTS - ALL PIPING ON THIS SHEET IS 8" UNLESS OTHERWISE NOTED.

ELEMENT FLOW SCHEDULE

PUMP UNIT	ELEMENT	DESIGN GPM	STATIC LIFT	EFFECT
PUMP & MANIFOLD #1 TOTAL REQ'D 4700 GPM @35FT TDH	NL-7	1000	30'	HEAVY, NON UNIFORM, NOT NECESSARILY WELL DEFINED.
	NL-6	200	26'	LIGHT, NON UNIFORM, WELL DEFINED
	NK-5	1000	13.5'	HEAVY, GUSHING
	NK-6	1000	13.5'	HEAVY, NON UNIFORM WELL DEFINED.
	NH-3	1500	13'	VERY HEAVY, UNIFORM WELL DEFINED.
PUMP AND MANIFOLD #2 TOTAL REQ'D 6800 GPM @ 27 FT TDH	BUBBLERS IN VERTICAL ELEMENTS NF THRU NR	1200	14.5'	100 GPM EACH (MAX) FOR 12 ELEMENTS
	PA-4	1000	8'	HEAVY, UNIFORM, WELL DEFINED
	NC-9	800	22'	MEDIUM HEAVY, RUSHING
	EJ-8	800	10'	MEDIUM, TURBULENT
	EJ-13	1000	7.5'	HEAVY, NON UNIFORM, WELL DEFINED
PUMP AND MANIFOLD #3 TOTAL REQ'D. 5600 GPM @38.5 FT TDH	EC-6	800	33.5'	MEDIUM TO HEAVY, UNIFORM, WELL DEFINED
	EC-7	1200	13.5'	VERY HEAVY UNIFORM WELL DEFINED
	EF-5	1000	28'	HEAVY UNIFORM WELL DEFINED
	EN-3	1000	13.5	HEAVY, TURBULENT BROKEN UNDEFINED
	BUBBLER IN VERTICAL ELEMENTS NA THRU ND EAST WALL	1600	14.5'	100 GPM EACH (MAX) FOR 17 ELEMENTS.
PUMP AND MANIFOLD #3 TOTAL REQ'D 4300 GPM @34.5 FT TDH	NC-6	600	24'	MEDIUM, UNIFORM
	EF-7	1000	18'	HEAVY, GUSHING, RUSHING.
	EH-3	1500	13'	VERY HEAVY, UNIFORM, WELL DEFINED.
	EO-6	1000	29.5'	HEAVY, NON UNIFORM, WELL DEFINED
	EO-8	300	20'	LIGHT, UNIFORM, WELL DEFINED

EMBARCADERO PLAZA

EMBARCADERO LOWER MARKET APPROVED REDEVELOPMENT PROJECT AREA E1

FOUNTAIN PIPING PLAN

SAN FRANCISCO REDEVELOPMENT AGENCY IN COOPERATION
WITH THE SAN FRANCISCO RECREATION AND PARK DEPARTMENT
AND SAN FRANCISCO DEPARTMENT OF PUBLIC WORKS

JOINT VENTURE ARCHITECTS:
LAWRENCE HALPRIN & ASSOCIATES
JOHN S. BOLLES ASSOCIATES
MARIO J. CIAMPI & ASSOCIATES

MECHANICAL AND ELECTRICAL ENG.
BEAMER • WILKINSON AND ASSO.
478 SANTA CLARA AVE.,
OAKLAND, CALIF 94610 415-834-4177

SCALE: AS NOTED
DATE: 25 JAN. 1969
DRAWN BY: RC/VSD

M2

SHEET M2 OF 6

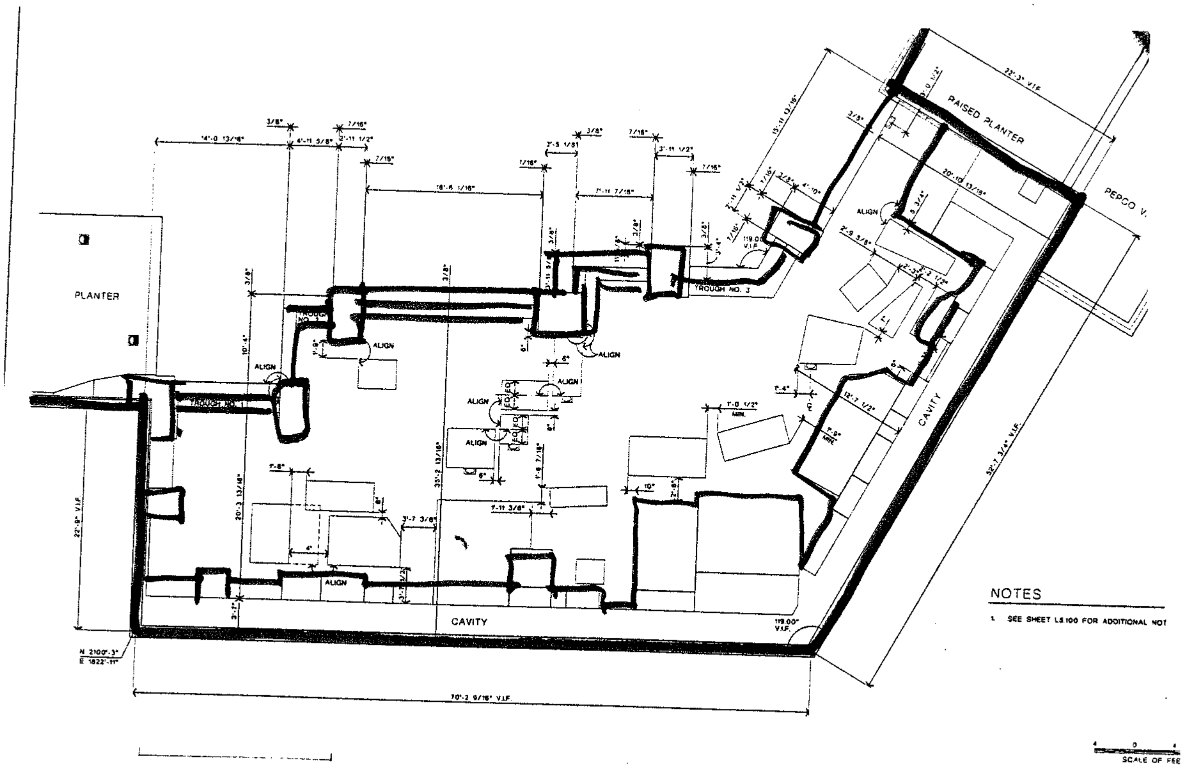
PLANTER
TROUGH NO. 1
TROUGH NO. 2
TROUGH NO. 3
RAISED PLANTER
PEPCO V.
CAVITY
CAVITY
ALIGN
EQ
14'-0 13/16"
4'-11 5/8"
2'-11 1/2"
3/8"
7/16"
18'-6 1/16"
3'-5 1/8"
7'-11 7/16"
3'-11 1/2"
15'-11 13/16"
22'-3" V.I.F.
20'-10 13/16"
2'-9 3/8"
12'-7 1/2"
1'-0 1/2" MIN.
7'-9" MIN.
1'-4"
10'-4"
20'-3 13/16"
35'-2 13/16"
1'-8 7/16"
1'-11 3/8"
3'-7 3/8"
1'-8"
4"
6"
10"
2'-6"
3'-1"
22'-9" V.I.F.
119.00° V.I.F.
52'-7 3/4" V.I.F.
70'-2 9/16" V.I.F.
N 2100'-3"
E 1822'-11"

NOTES

1. SEE SHEET LS.100 FOR ADDITIONAL NOT

4 0 4
SCALE OF FEE

DESIGNED: LH	SUB SHEET NO.	TITLE OF SHEET
DRAWN: DK	L 5.401	FOUNTAIN NO. LAYOUT PL
TECH. REVIEW: DM		
DATE: 5/13/94		WEST POTOMAC P

WORK UNDER OTHER SECTION —
1- 120-V SUPPLY AND CONNECTION TO CONTROLLER
2- 2" CONDUIT THROUGH WALL FOR 24-V CONTROL LINES
3- 3" PROTECTED COPPER STUBBED THROUGH WALL
FOR IRRIGATION SYSTEM SUPPLY
CHECK DRAWINGS # ME-1 & # M4 FOR EXACT LOCATIONS

WORK UNDER THIS SECTION —
1- FURNISH & INSTALL GRISWOLD CONTROLLER *
2- INSTALL AUTOMATIC SYSTEM AS PER
THIS DRAWING AND SPECIFICATIONS
3- COORDINATE ALL WORK WITH OTHER
TRADES
* CONSULT # ME-1 FOR CONTROLLER LOCATION

INSTALL ALL 24-V CONTROL LINES
UNDER PAVING IN 2" P.V.C. CONDUIT.
EXTEND CONDUIT 6" INTO EACH
PLANT AREA. NO SPLICES PERMITTED
IN SUCH CONDUITS [3 PLACES]

LEGEND

●	403 HO	BUCKNER POP-UP SPRAY
○	403 DFO	BUCKNER POP-UP SPRAY
▼	404 BQ	BUCKNER POP-UP SPRAY
▽	404 BH	BUCKNER POP-UP SPRAY
□	404 BDF	BUCKNER POP-UP SPRAY
⊖	404 BHO	BUCKNER POP-UP SPRAY
○	404 BDFO	BUCKNER POP-UP SPRAY
◆	#3LT	BUCKNER QUICK COUPLING VALVE
⊣●	200 E	SERIES,- GRISWOLD REMOTE CONTROL VALVE WITH PET COCK
▬	240E-24W	GRISWOLD CONTROLLER

3 / 2" — CONTROLLER STATION — R.C.V. SIZE

——— 1120-200 PSI, N.S.F. P.V.C. PLASTIC PIPE WITH SCHEDULE 40 FITTINGS.

– – – TYPE "L" COPPER MAIN LINE PIPE.

NOTE: 65-P.S.I.
100 G.P.M.

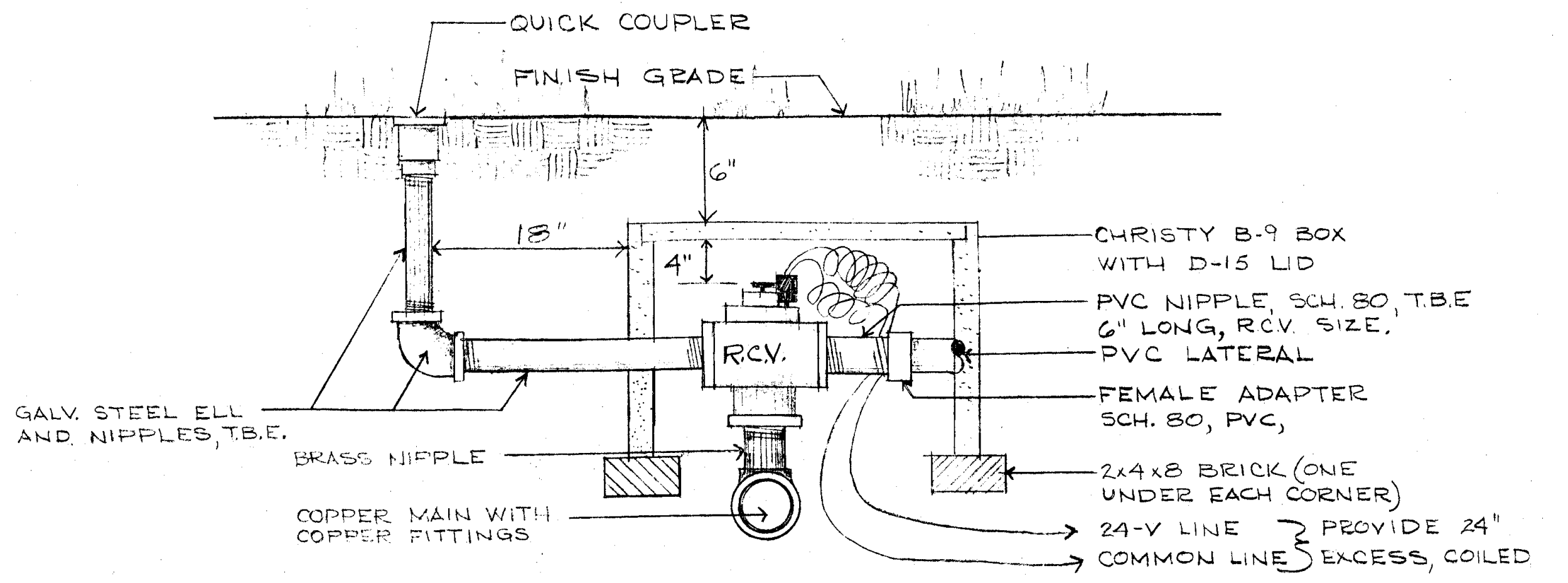
QUICK COUPLER
FINISH GRADE
6"
18"
4"
R.C.V.
CHRISTY B-9 BOX WITH D-15 LID
PVC NIPPLE, SCH. 80, T.B.E. 6" LONG, R.C.V. SIZE.
PVC LATERAL
FEMALE ADAPTER SCH. 80, PVC,
GALV. STEEL ELL AND NIPPLES, T.B.E.
BRASS NIPPLE
2x4x8 BRICK (ONE UNDER EACH CORNER)
COPPER MAIN WITH COPPER FITTINGS
24-V LINE
COMMON LINE
PROVIDE 24" EXCESS, COILED

NOTES:
- NO EARTH FILL PERMITTED INSIDE REMOTE CONTROL VALVE BOX.
- ONLY ONE REMOTE CONTROL VALVE PER BOX.
- ALL REMOTE CONTROL VALVES TO BE EQUIPPED WITH PET COCKS.

TYPICAL VALVE INSTALLATION
NO SCALE

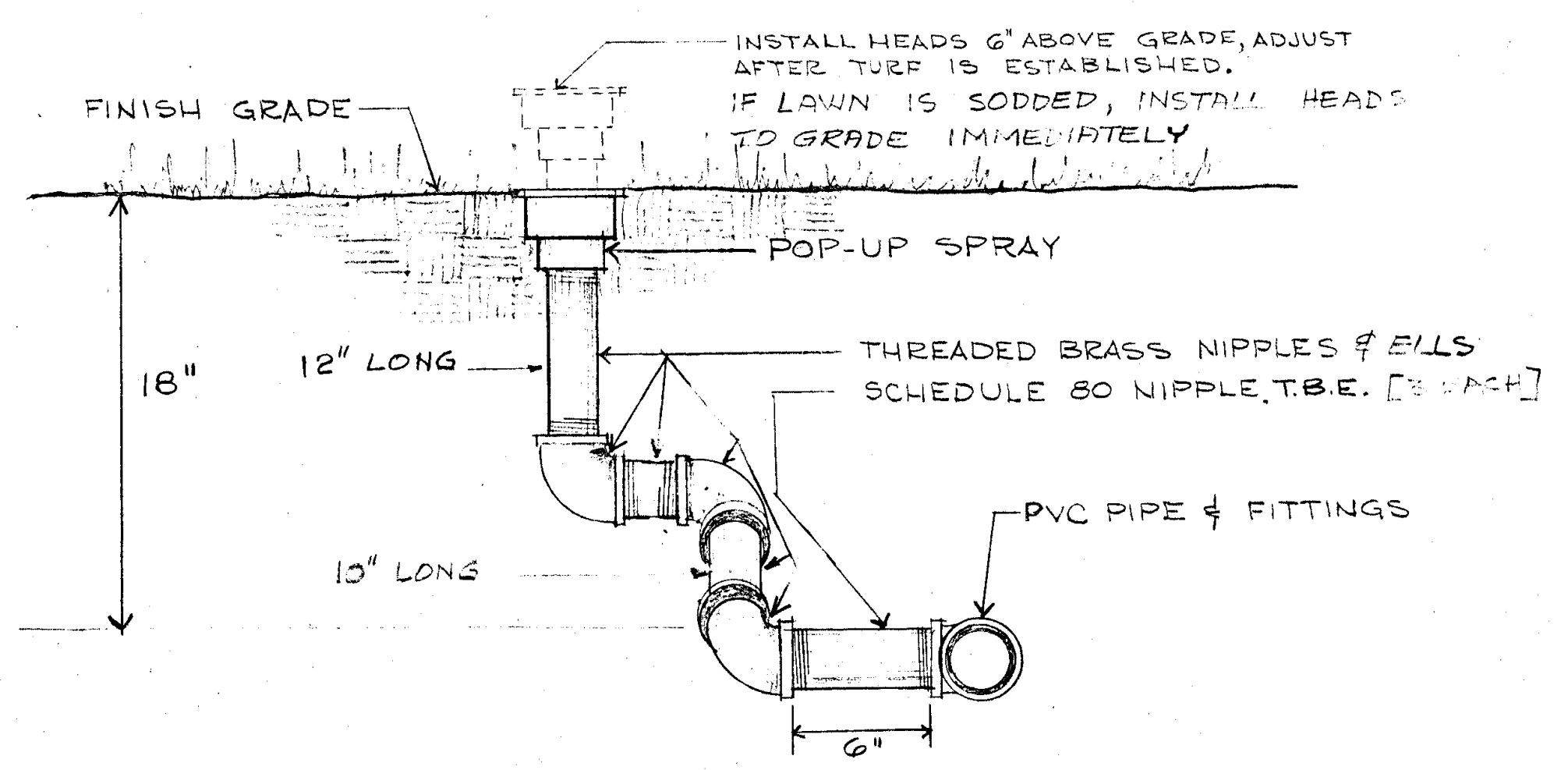
INSTALL HEADS 6" ABOVE GRADE, ADJUST AFTER TURF IS ESTABLISHED.
IF LAWN IS SODDED, INSTALL HEADS TO GRADE IMMEDIATELY
FINISH GRADE
POP-UP SPRAY
18"
12" LONG
THREADED BRASS NIPPLES & ELLS
SCHEDULE 80 NIPPLE, T.B.E. [3 EACH]
10" LONG
PVC PIPE & FITTINGS
6"

TYPICAL SWING JOINT RISER INSTALLATION
NO SCALE

GEORGE W. BELL
IRRIGATION CONSULTANT

EMBARCADERO PLAZA
EMBARCADERO LOWER MARKET APPROVED REDEVELOPMENT PROJECT AREA E1

IRRIGATION PLAN & DETAIL

SAN FRANCISCO REDEVELOPMENT AGENCY IN COOPERATION
WITH THE SAN FRANCISCO RECREATION AND PARK DEPARTMENT
AND SAN FRANCISCO DEPARTMENT OF PUBLIC WORKS

JOINT VENTURE ARCHITECTS: Lawrence Halprin
LAWRENCE HALPRIN & ASSOCIATES
JOHN S. BOLLES ASSOCIATES
MARIO J. CIAMPI & ASSOCIATES

SCALE: 1" = 20'-0"
DATE: JAN. 25, 1969
DRAWN BY: G.B

L·2

SHEET L-2 OF 2

TREES IN LAWN AREAS

6 —	PINUS RADIATA	—— 30" BOX ,	16'- 18' H.
10 —	PINUS RADIATA	—— 24" BOX	12' H.
30 —	PINUS RADIATA	—— 15 GAL	6' - 8' H.
4 —	POPULUS NIGRA ITALICA	- 30" BOX	22'- 25' H.
10 —	POPULUS NIGRA ITALICA	- 24" BOX	18'- 20' H.
27 —	POPULUS NIGRA ITALICA	- 15 GAL	8' - 10' H.
30 —	EUCALYPTUS GLOBULUS	- 5 GAL	6' H

16 PLATANUS ACERIFOLIA , MATCHED
15 GAL., 8'-10' H, BRANCH AT 6'
THE EMBARCADERO
16 PLATANUS ACERIFOLIA , MATCHED
15 GAL., 8'-10' H, BRANCH AT 6'
SWB
RIDGE
LAWN (SOD)
SLOPE
9 — PLATANUS ACERIFOLIA , MATCHED
15 GAL , 8'-10' H.
BRANCH 6' (STREET TREES)
LAWN (SOD)
SLOPE
18 - PLATANUS ACERIFOLIA , MATCHED
24" BOX , 14' H, 6' SP BRANCH AT - 7'
STEUART ST.
20 - PLATANUS ACERIFOLIA , MATCHED
36" BOX , 14'-16' H., 10' SP. , BRANCH AT 8'-0
MARKET ST.

NOTE :

1 FOR EXACT DIMENSION OF CONSTRUCTION DETAILS AND FINISHED ELEVATIONS SEE LAYOUT AND GRADING PLANS.
LAYOUT PLAN — SHEET 2
GRADING PLAN — SHEET 3

2. FOR PLANTING IN TREE PITS IN PAVED AREA, SEE DETAIL 13/11

3. QUANTITY FOR CAST STONE POTS :
POT #4 REQUIRES 12
POT #5 " 12

4. PROVIDE FOR EACH POT WITH THE FOLLOWING PLANTS :
FOR POT #4 - 12 PLANTS PER POT , SIZE : 4" POT
PLANT SHALL BE : PELARGONIUM , MIXED COLOR - RED, PINK SALMON, WHITE,
FOR POT #5 - 80 PLANTS PER POT , SIZE : FLATS.
PLANTS SHALL BE : BEGONIA SEMPERIRENS, RED, PINK FLOWER, RED LEAF.
MARIGOLDS , PIGMY YELLOW & PIGMY ORANGE.
(DO NOT MIX BEGONIA & MARIGOLDS IN ONE POT)

5. LOCATION OF CAST STONE POTS SHALL BE LOCATED IN FIELD UNDER DIRECTION OF THE ARCHITECT, CONTRACTOR TO INFORM THE ARCHITECT 5 DAYS IN ADVANCE PRIOR TO DELIVERY OF POTS.

LEGEND :

- ⊙ — PLATANUS ACERIFOLIA
- ⊙ — POPULUS NIGRA ITALICA
- ✿ — EUCALYPTUS GLOBULUS
- ✳ — PINUS RADIATA

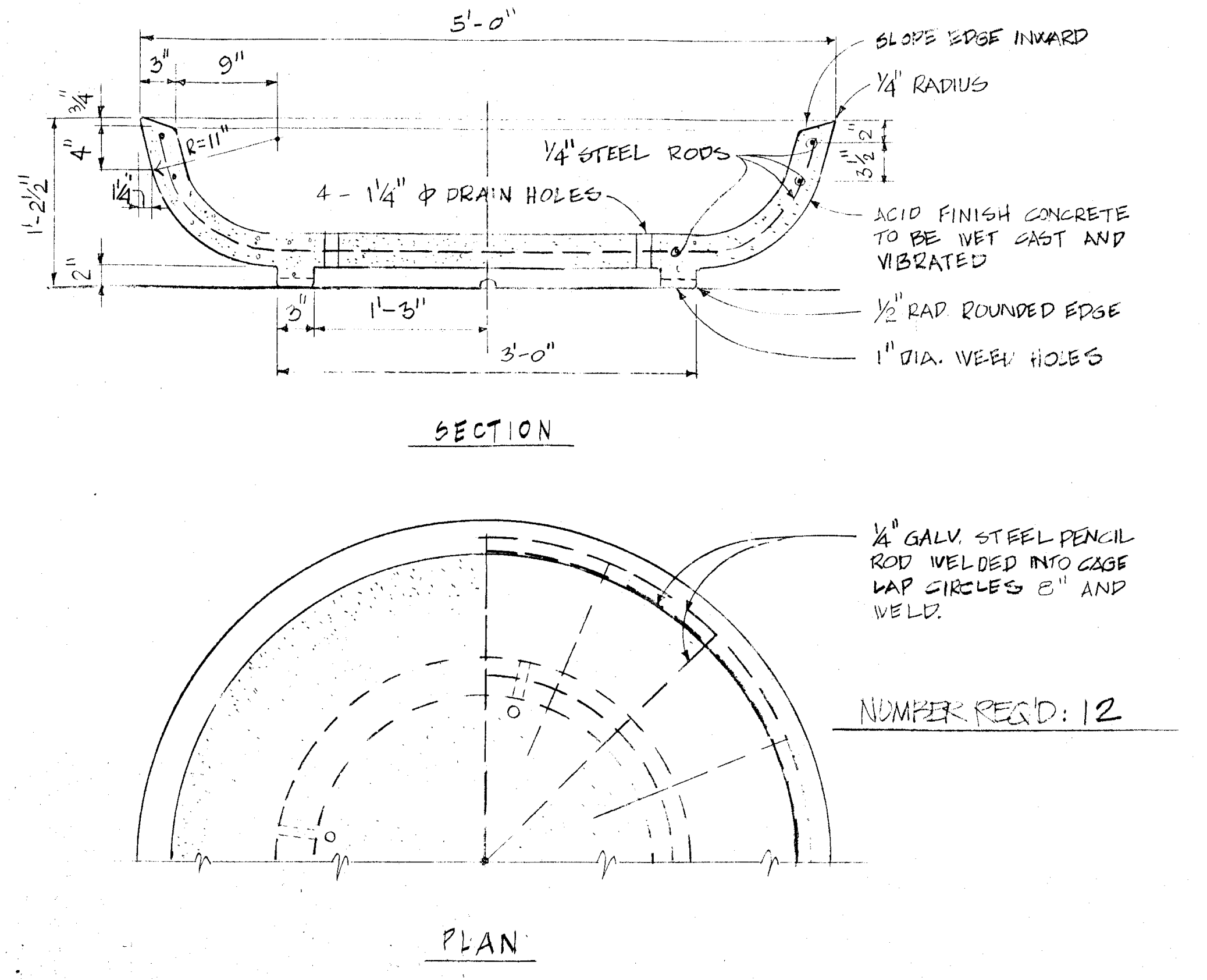
5'-0"
3"
9"
3/4"
4"
R=11"
1 1/4"
1'-2 1/2"
2"
1/4" STEEL RODS
4 - 1 1/4" ⌀ DRAIN HOLES
3 1/2"
2"
3"
1'-3"
3'-0"
SLOPE EDGE INWARD
1/4" RADIUS
ACID FINISH CONCRETE TO BE WET CAST AND VIBRATED
1/2" RAD. ROUNDED EDGE
1" DIA. WEEP HOLES
SECTION
1/4" GALV. STEEL PENCIL ROD WELDED INTO CAGE LAP CIRCLES 8" AND WELD.
NUMBER REQ'D: 12
PLAN

CAST STONE POT-#5
SCALE 1" = 1'-0"

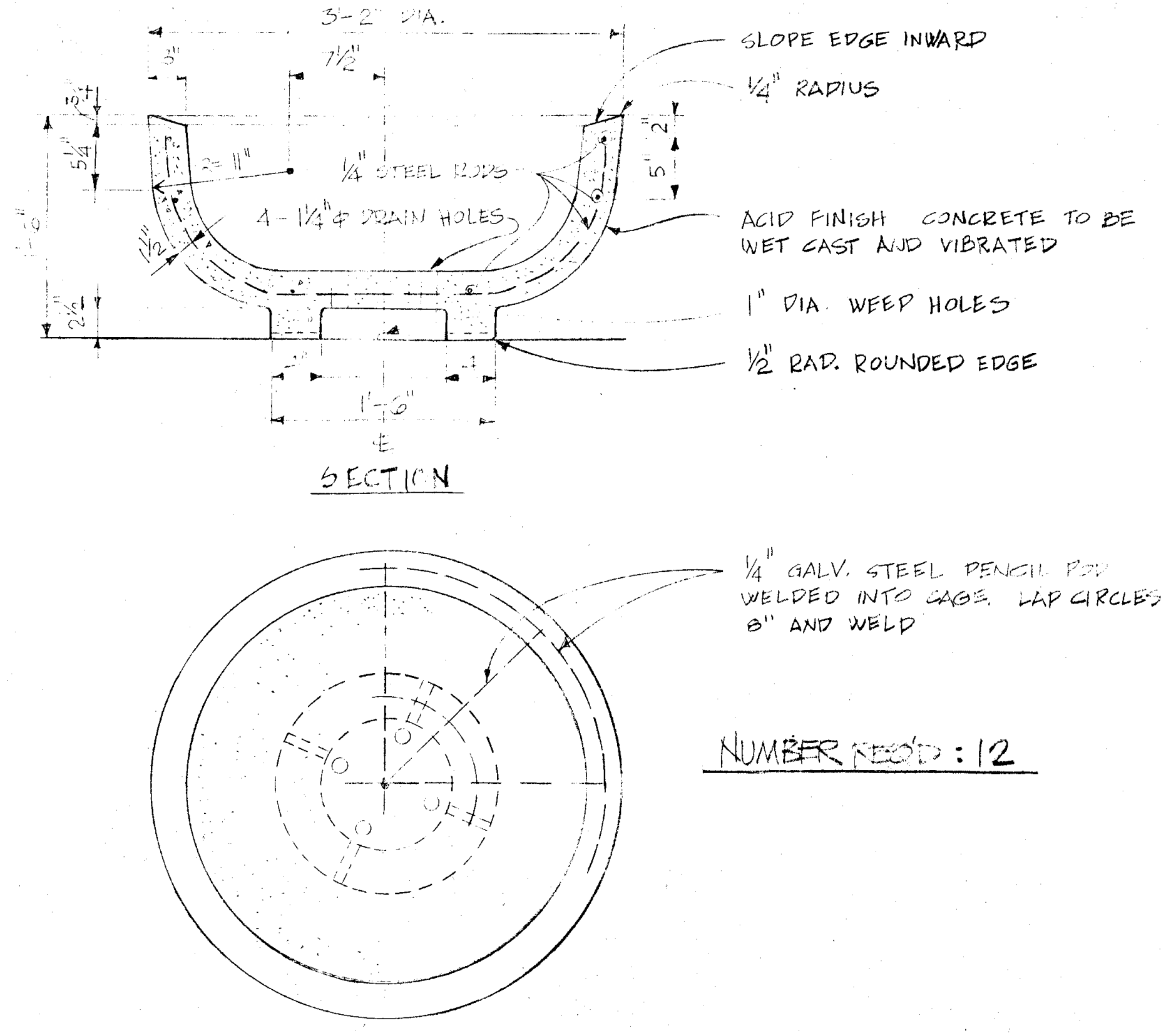
3'-2" DIA.
3"
7 1/2"
3/4"
5 1/4"
R= 11"
1 1/2"
1'-6"
2 1/2"
1/4" STEEL RODS
4 - 1 1/4" ⌀ DRAIN HOLES
2"
5"
1'-6"
SLOPE EDGE INWARD
1/4" RADIUS
ACID FINISH CONCRETE TO BE WET CAST AND VIBRATED
1" DIA. WEEP HOLES
1/2" RAD. ROUNDED EDGE
SECTION
1/4" GALV. STEEL PENCIL ROD WELDED INTO CAGE. LAP CIRCLES 8" AND WELD
NUMBER REQ'D : 12
PLAN

CAST STONE POT-#4
SCALE 1" = 1'-0"

EMBARCADERO PLAZA

EMBARCADERO LOWER MARKET APPROVED REDEVELOPMENT PROJECT AREA E1

PLANTING PLAN & DETAIL

SAN FRANCISCO REDEVELOPMENT AGENCY IN COOPERATION
WITH THE SAN FRANCISCO RECREATION AND PARK DEPARTMENT
AND SAN FRANCISCO DEPARTMENT OF PUBLIC WORKS

JOINT VENTURE ARCHITECTS:
LAWRENCE HALPRIN & ASSOCIATES Lawrence Halprin
JOHN S. BOLLES ASSOCIATES C 321
MARIO J. CIAMPI & ASSOCIATES Mario J. Ciampi

SCALE: 1" = 20'-0"
DATE: JAN. 25, 1969
DRAWN BY: W.L.

L·1

SHEET L-1 OF 2

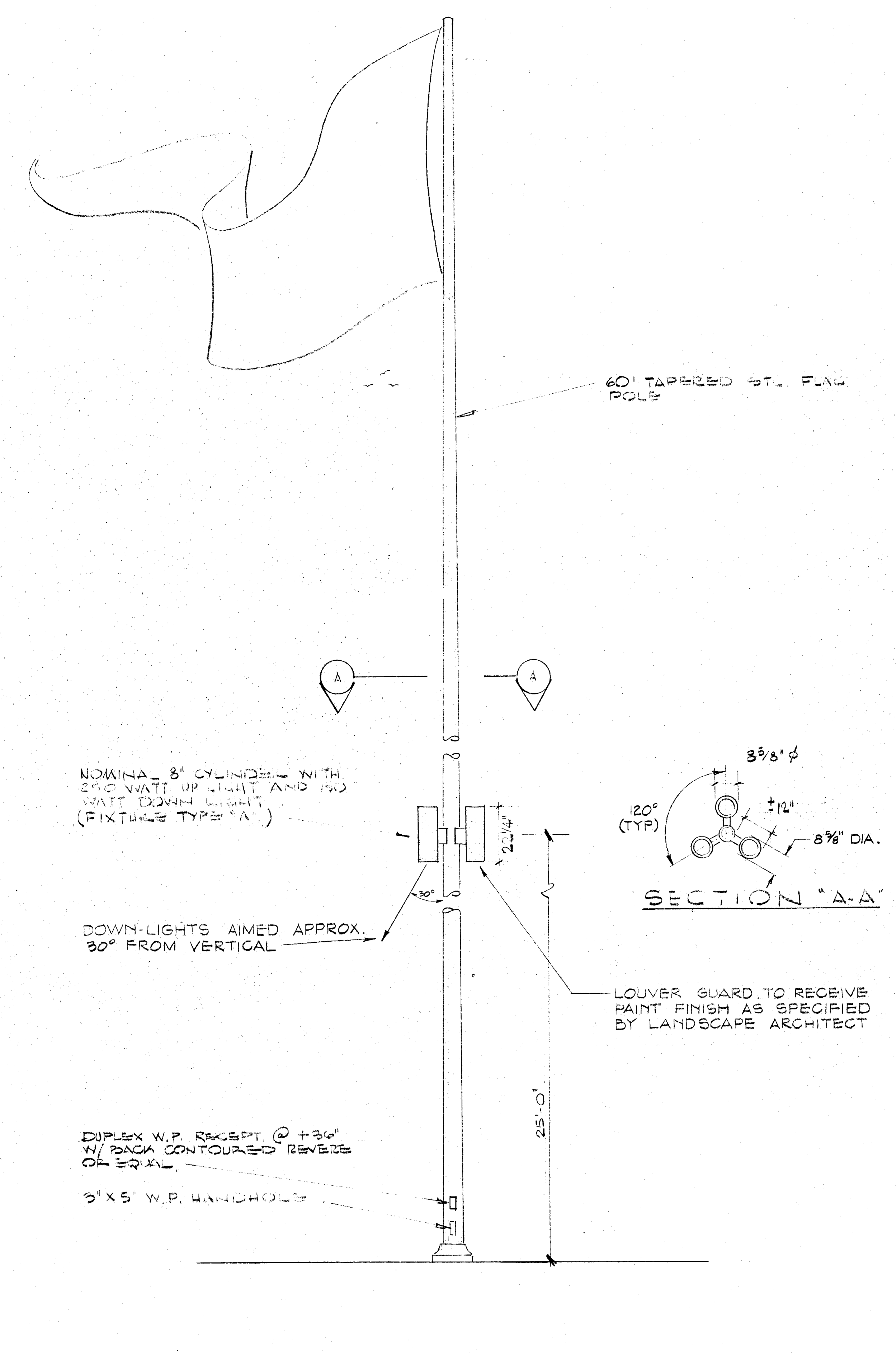
60' TAPERED STL. FLAG POLE
A
A
NOMINAL 8" CYLINDER WITH 250 WATT UP LIGHT AND 150 WATT DOWN LIGHT (FIXTURE TYPE "A")
2 1/4"
DOWN-LIGHTS AIMED APPROX. 30° FROM VERTICAL
30°
LOUVER GUARD TO RECEIVE PAINT FINISH AS SPECIFIED BY LANDSCAPE ARCHITECT
25'-0"
DUPLEX W.P. RECEPT. @ +36" W/ BACK CONTOURED REVERE OR EQUAL
3"X5" W.P. HANDHOLE
8 5/8" ⌀
120° (TYP)
±12"
8 5/8" DIA.
SECTION "A-A"

FLAGPOLE LIGHTING DETAIL (A / E4)
SCALE 1/4"=1'-0"

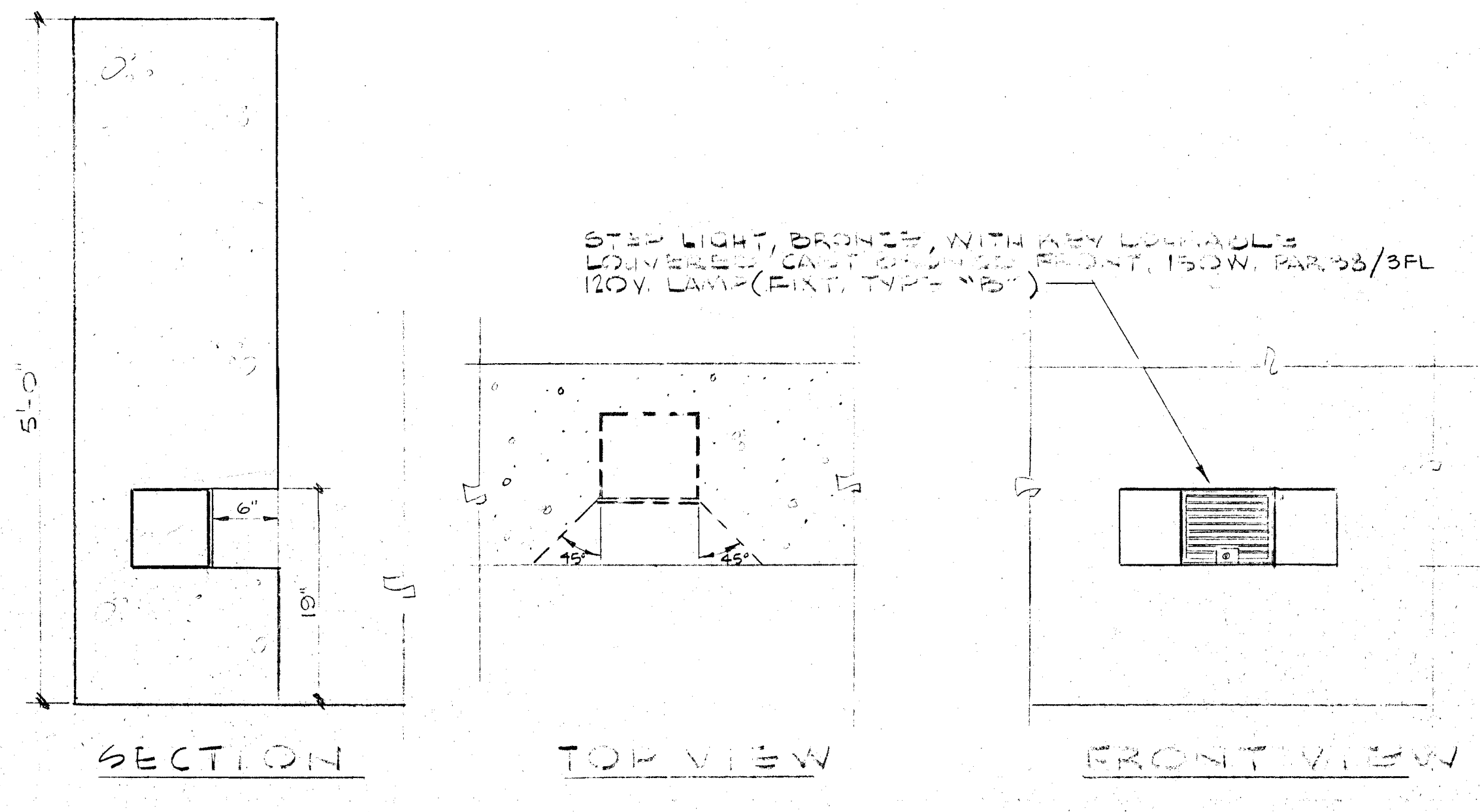
2'-0"
5'-0"
6"
10"
STEP LIGHT, BRONZE, WITH KEY LOCKABLE LOUVERED CAST BRONZE FRONT, 150W. PAR 38/3FL 120V. LAMP (FIXT. TYPE "B")
45°
45°
SECTION
TOP VIEW
FRONT VIEW

STEP LIGHT DETAIL (B / E4)
SCALE 1"=1'-0"

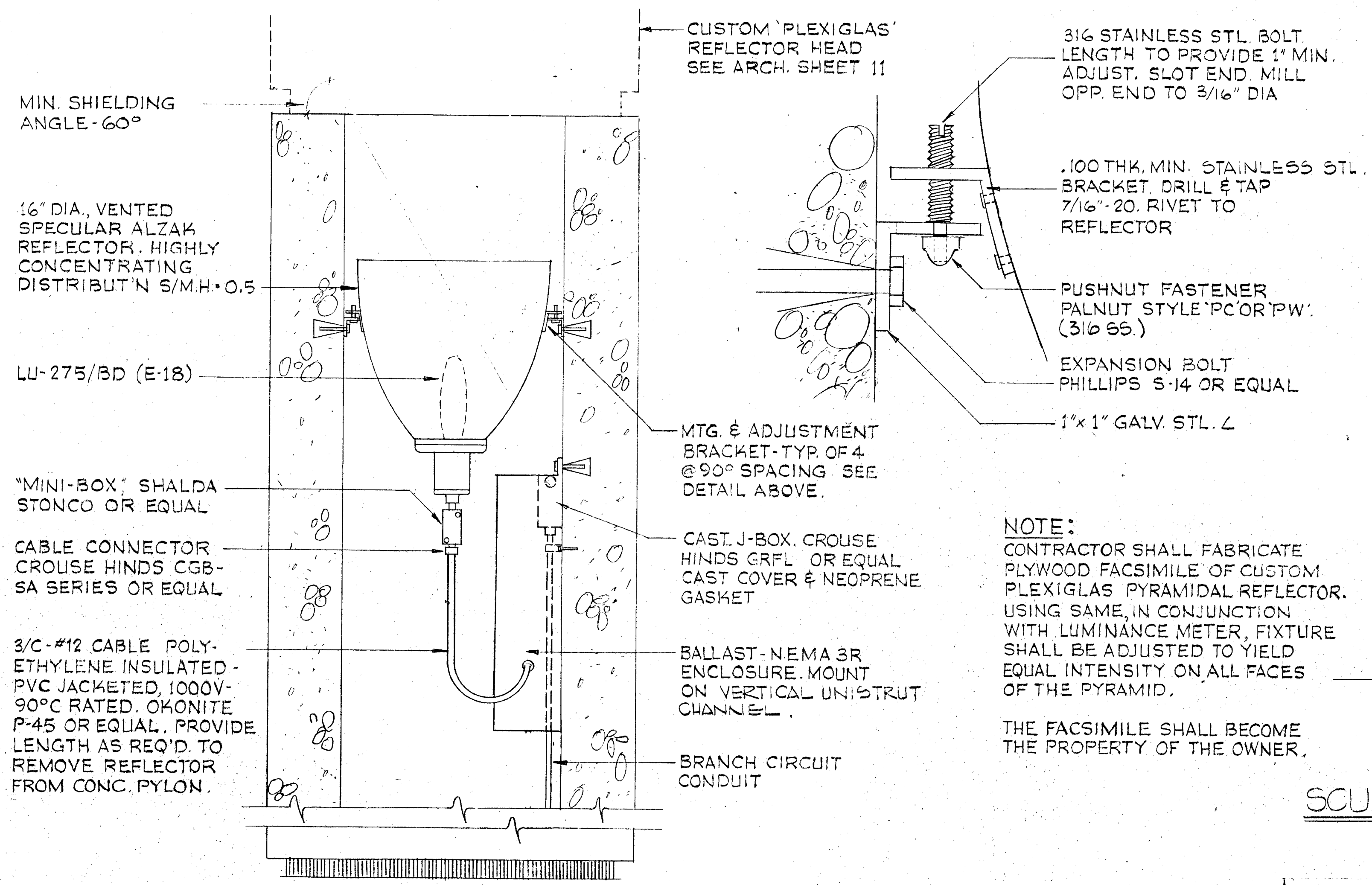
MIN. SHIELDING ANGLE-60°
CUSTOM 'PLEXIGLAS' REFLECTOR HEAD SEE ARCH. SHEET 11
16" DIA., VENTED SPECULAR ALZAK REFLECTOR. HIGHLY CONCENTRATING DISTRIBUT'N S/M.H.-0.5
LU-275/BD (E-18)
"MINI-BOX", SHALDA STONCO OR EQUAL
CABLE CONNECTOR CROUSE HINDS CGB-SA SERIES OR EQUAL
3/C-#12 CABLE POLY-ETHYLENE INSULATED-PVC JACKETED, 1000V-90°C RATED. OKONITE P-45 OR EQUAL. PROVIDE LENGTH AS REQ'D. TO REMOVE REFLECTOR FROM CONC. PYLON.
MTG. & ADJUSTMENT BRACKET-TYP. OF 4 @90° SPACING. SEE DETAIL ABOVE.
CAST. J-BOX. CROUSE HINDS GRFL OR EQUAL CAST COVER & NEOPRENE GASKET
BALLAST-N.E.M.A 3R ENCLOSURE. MOUNT ON VERTICAL UNISTRUT CHANNEL.
BRANCH CIRCUIT CONDUIT
316 STAINLESS STL. BOLT. LENGTH TO PROVIDE 1" MIN. ADJUST. SLOT END. MILL OPP. END TO 3/16" DIA
.100 THK. MIN. STAINLESS STL. BRACKET. DRILL & TAP 7/16"-20. RIVET TO REFLECTOR
PUSHNUT FASTENER PALNUT STYLE 'PC' OR 'PW'. (316 SS.)
EXPANSION BOLT PHILLIPS S-14 OR EQUAL
1"x1" GALV. STL. ∠

NOTE:
CONTRACTOR SHALL FABRICATE PLYWOOD FACSIMILE OF CUSTOM PLEXIGLAS PYRAMIDAL REFLECTOR. USING SAME, IN CONJUNCTION WITH LUMINANCE METER, FIXTURE SHALL BE ADJUSTED TO YIELD EQUAL INTENSITY ON ALL FACES OF THE PYRAMID.

THE FACSIMILE SHALL BECOME THE PROPERTY OF THE OWNER.

PYLON LIGHTING FIXTURE (C / E4)
SCALE 1 1/2"=1'-0"

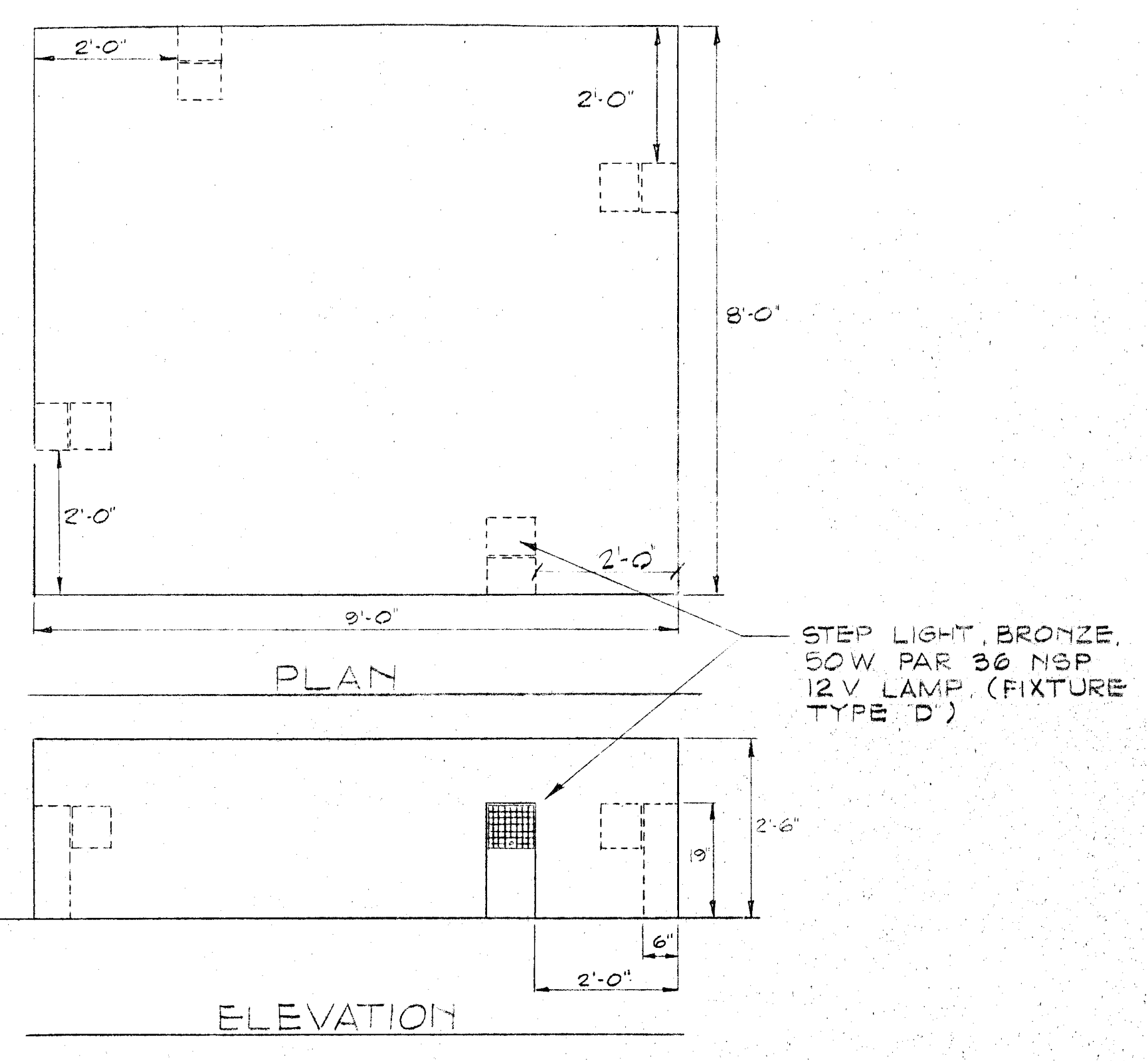
2'-0"
2'-0"
8'-0"
2'-0"
2'-0"
8'-0"
PLAN
STEP LIGHT, BRONZE, 50W. PAR 36 NSP 12 V. LAMP (FIXTURE TYPE 'D')
2'-6"
6"
2'-0"
ELEVATION

SCULPTURE BASE LIGHT DETAIL 1/2"=1'-0" (D / E4)

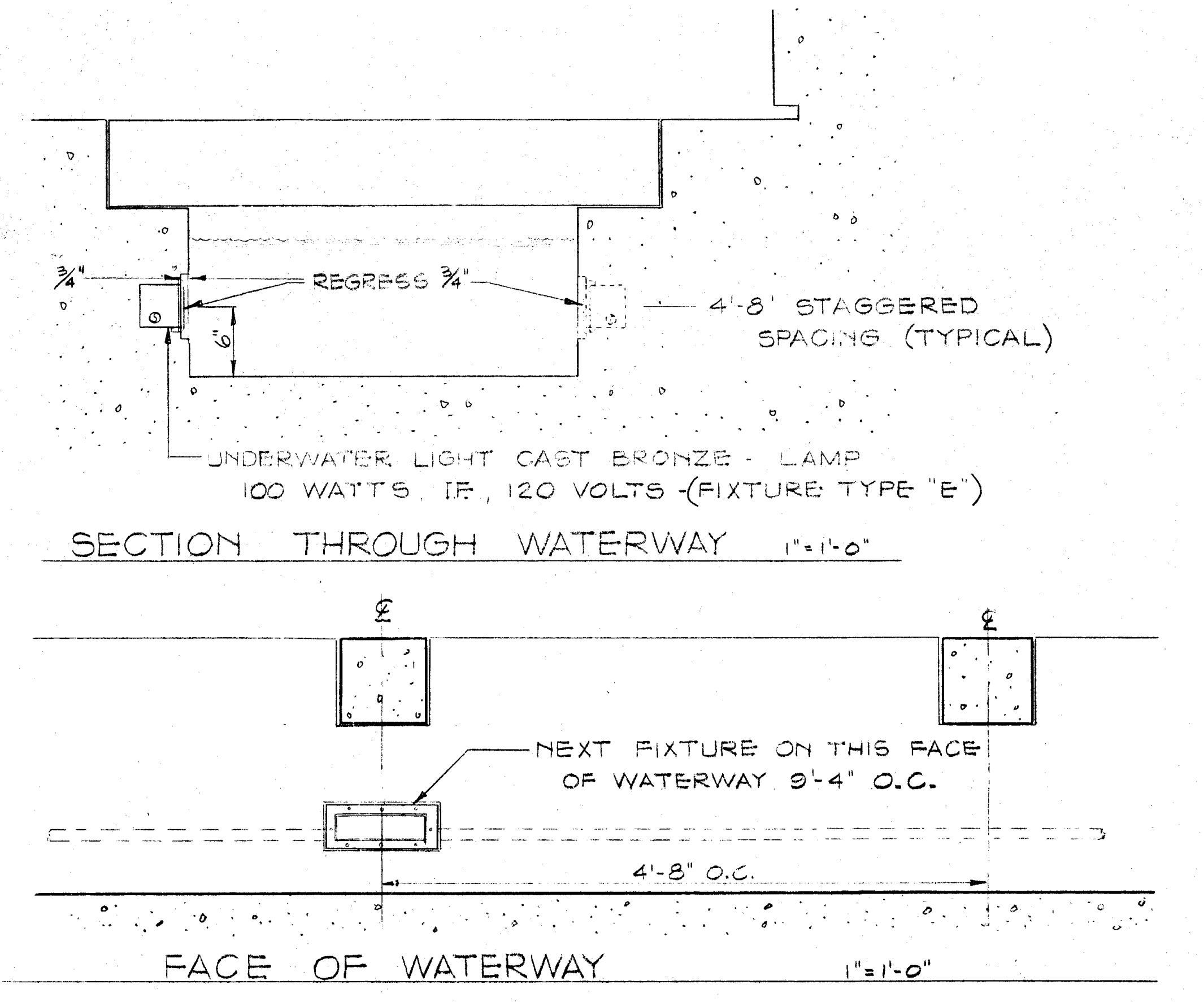
3/4"
REGRESS 3/4"
6"
4'-8' STAGGERED SPACING (TYPICAL)
UNDERWATER LIGHT CAST BRONZE - LAMP 100 WATTS, I.F., 120 VOLTS -(FIXTURE TYPE "E")
℄
℄
NEXT FIXTURE ON THIS FACE OF WATERWAY 9'-4" O.C.
4'-8" O.C.

SECTION THROUGH WATERWAY 1"=1'-0"

FACE OF WATERWAY 1"=1'-0"

RUNNEL LIGHTING DETAIL (E / E-4)

NOTE: IF ALTERNATE PRECAST "TIES" SPACING OF 9'-4" IS EMPLOYED, LIGHTS ON RUNNEL WALL NEAREST FOUNTAIN SHALL BE MT'D. UNDER "TIES".

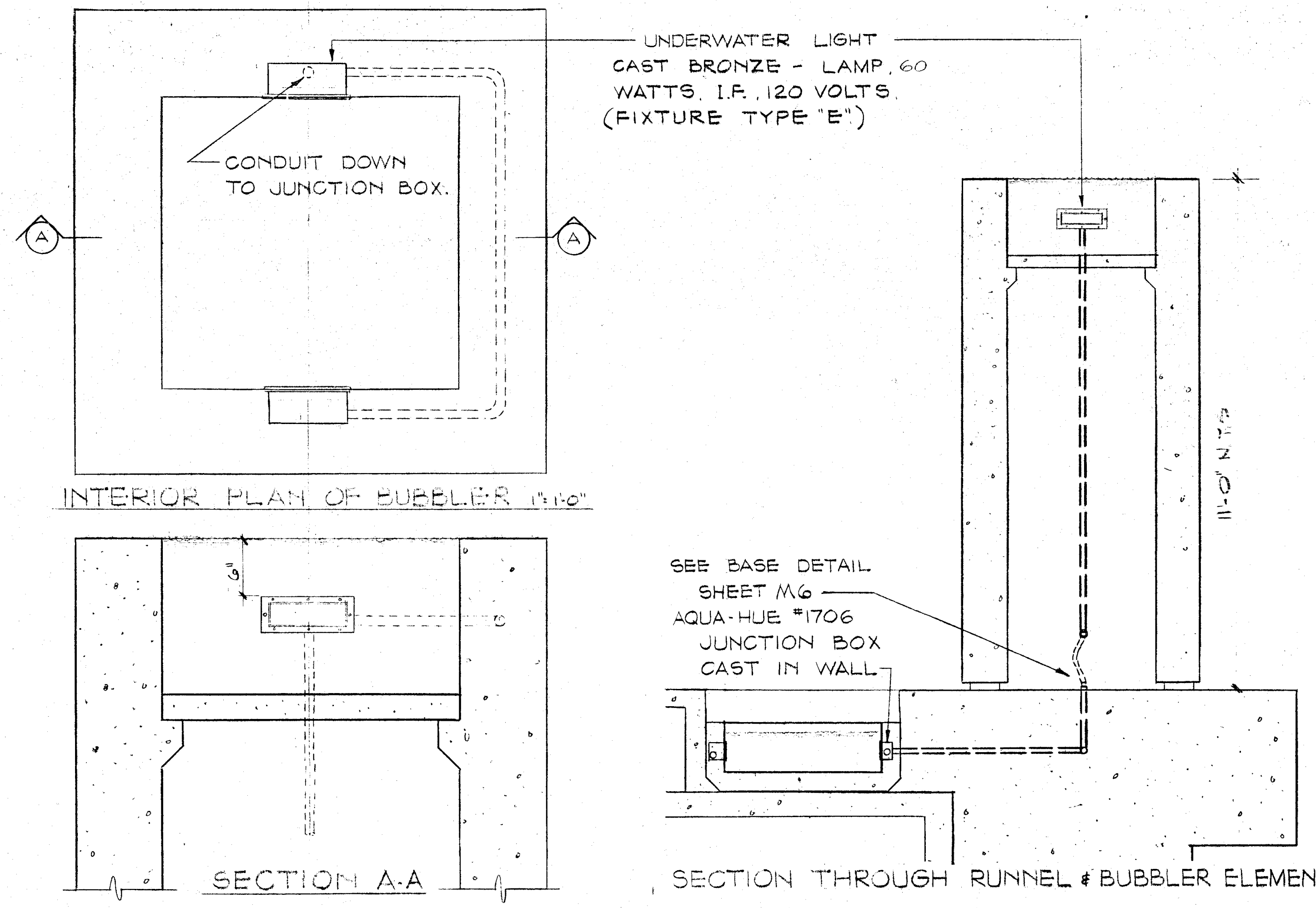
UNDERWATER LIGHT CAST BRONZE - LAMP 60 WATTS. I.F. 120 VOLTS (FIXTURE TYPE "F")
CONDUIT DOWN TO JUNCTION BOX.
A
A
11'-0" N.T.S.
SEE BASE DETAIL SHEET M6
AQUA-HUE #1706 JUNCTION BOX CAST IN WALL

INTERIOR PLAN OF BUBBLER 1"=1'-0"

SECTION A-A

SECTION THROUGH RUNNEL & BUBBLER ELEMENT 1/2"=1'-0"

BUBBLER ELEMENT LIGHTING DETAIL (F / E-4)

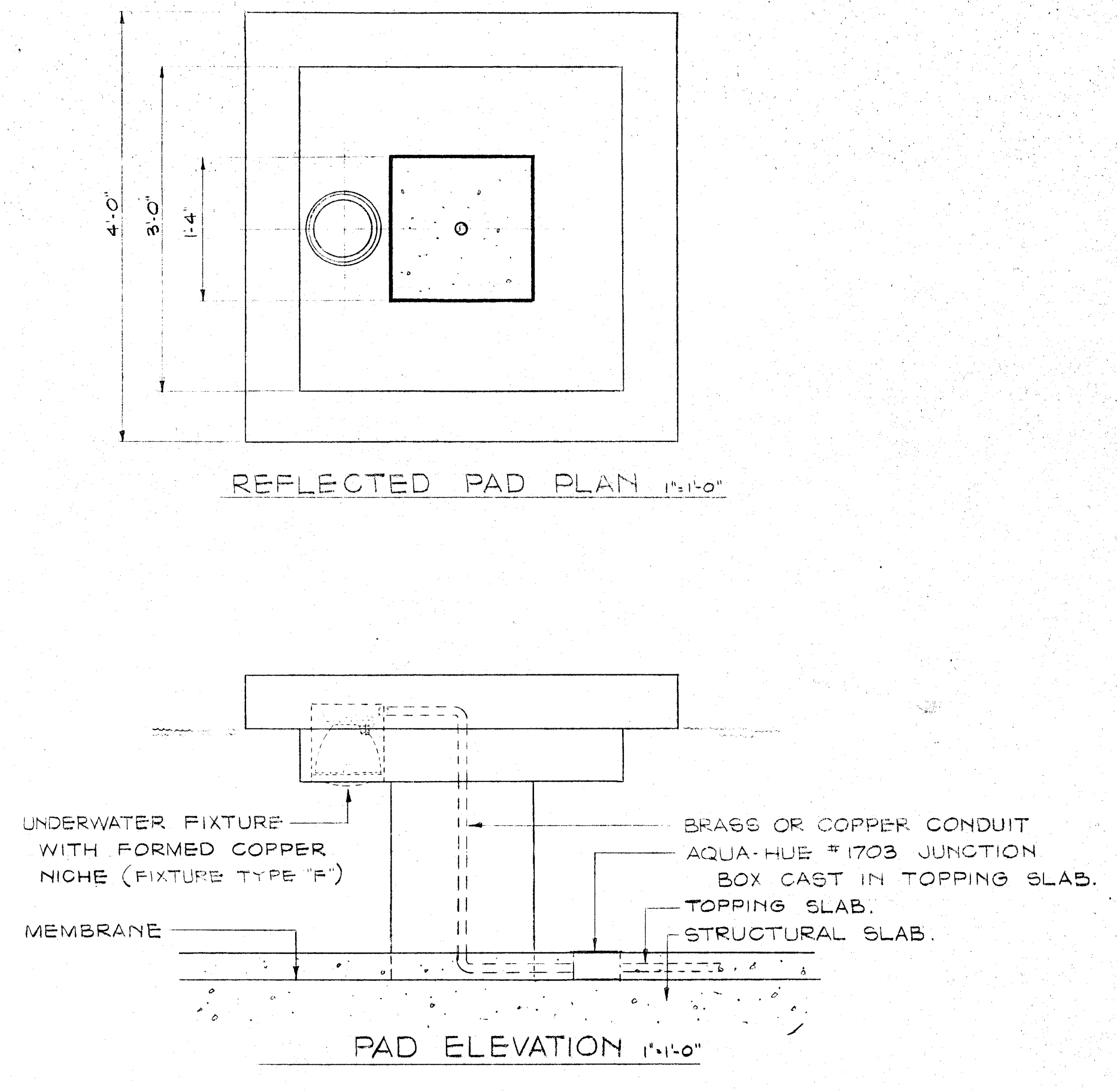
4'-0"
1'-4"
UNDERWATER FIXTURE WITH FORMED COPPER NICHE (FIXTURE TYPE "F")
MEMBRANE
BRASS OR COPPER CONDUIT
AQUA-HUE #1703 JUNCTION BOX CAST IN TOPPING SLAB.
TOPPING SLAB.
STRUCTURAL SLAB.

REFLECTED PAD PLAN 1"=1'-0"

PAD ELEVATION 1"=1'-0"

STEPPING PAD DOWNLIGHT DETAIL (G / E-4)

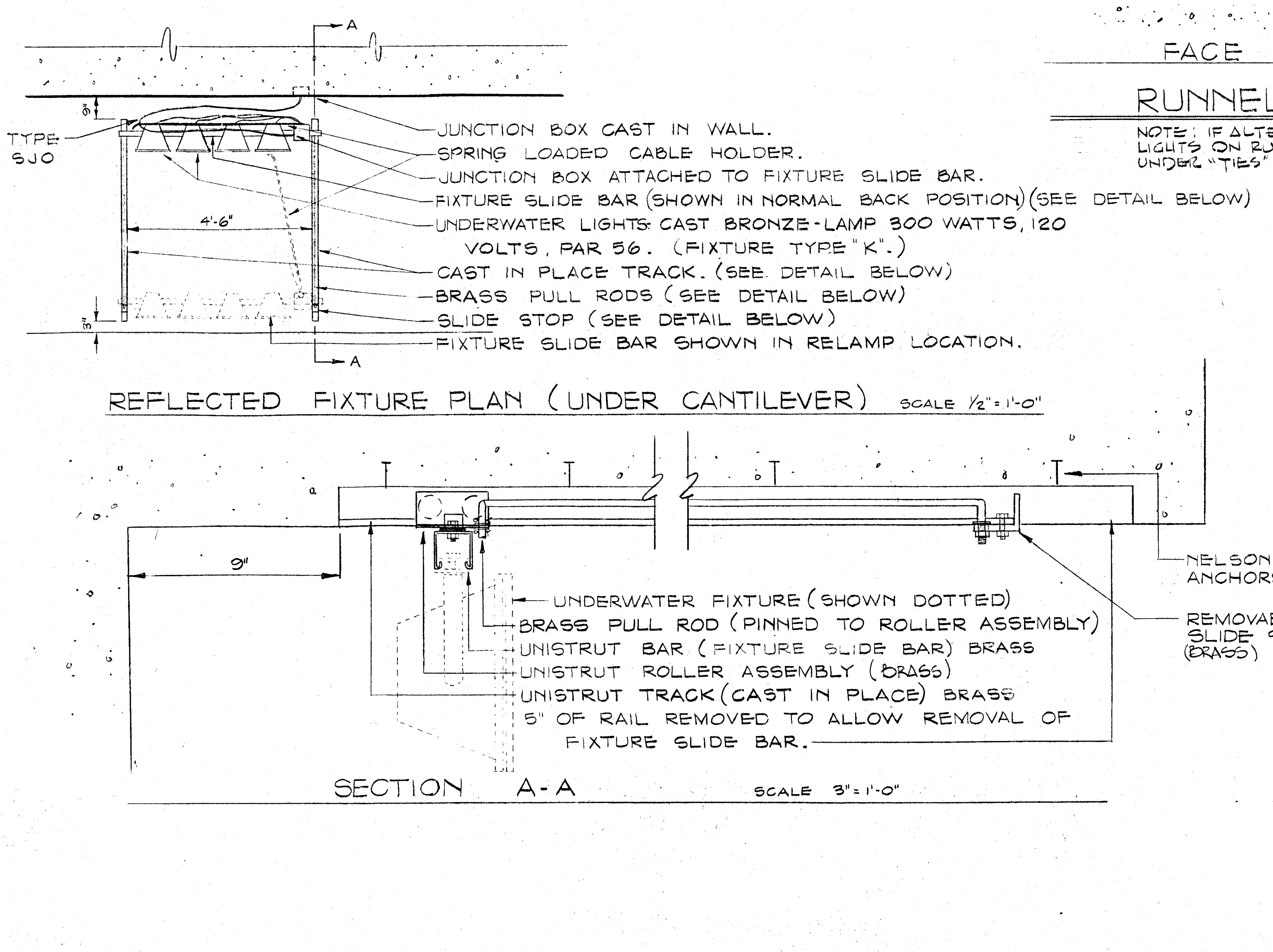
A
A
CORD TYPE 3/C #14 SJO
9"
4'-6"
3"
JUNCTION BOX CAST IN WALL.
SPRING LOADED CABLE HOLDER.
JUNCTION BOX ATTACHED TO FIXTURE SLIDE BAR.
FIXTURE SLIDE BAR (SHOWN IN NORMAL BACK POSITION) (SEE DETAIL BELOW)
UNDERWATER LIGHTS CAST BRONZE-LAMP 300 WATTS, 120 VOLTS, PAR 56. (FIXTURE TYPE "K".)
CAST IN PLACE TRACK. (SEE DETAIL BELOW)
BRASS PULL RODS (SEE DETAIL BELOW)
SLIDE STOP (SEE DETAIL BELOW)
FIXTURE SLIDE BAR SHOWN IN RELAMP LOCATION.
9"
UNDERWATER FIXTURE (SHOWN DOTTED)
BRASS PULL ROD (PINNED TO ROLLER ASSEMBLY)
UNISTRUT BAR (FIXTURE SLIDE BAR) BRASS
UNISTRUT ROLLER ASSEMBLY (BRASS)
UNISTRUT TRACK (CAST IN PLACE) BRASS
5" OF RAIL REMOVED TO ALLOW REMOVAL OF FIXTURE SLIDE BAR.
NELSON CONCRETE ANCHORS
REMOVABLE SLIDE STOP (BRASS)

REFLECTED FIXTURE PLAN (UNDER CANTILEVER) SCALE 1/2"=1'-0"

SECTION A-A SCALE 3"=1'-0"

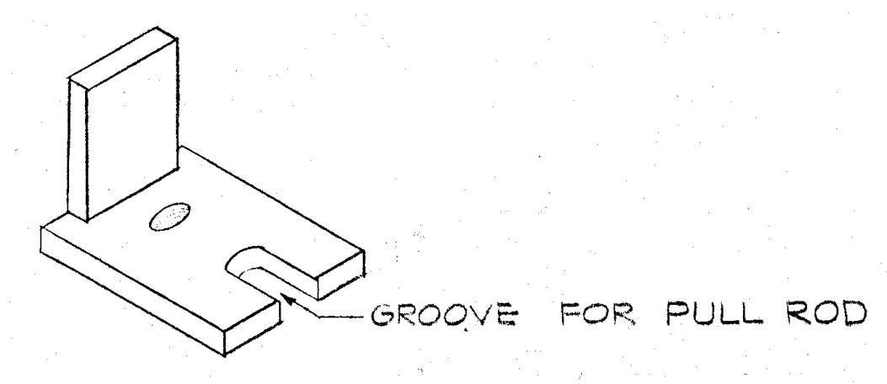
GROOVE FOR PULL ROD

SLIDE STOP DETAIL N.T.S.

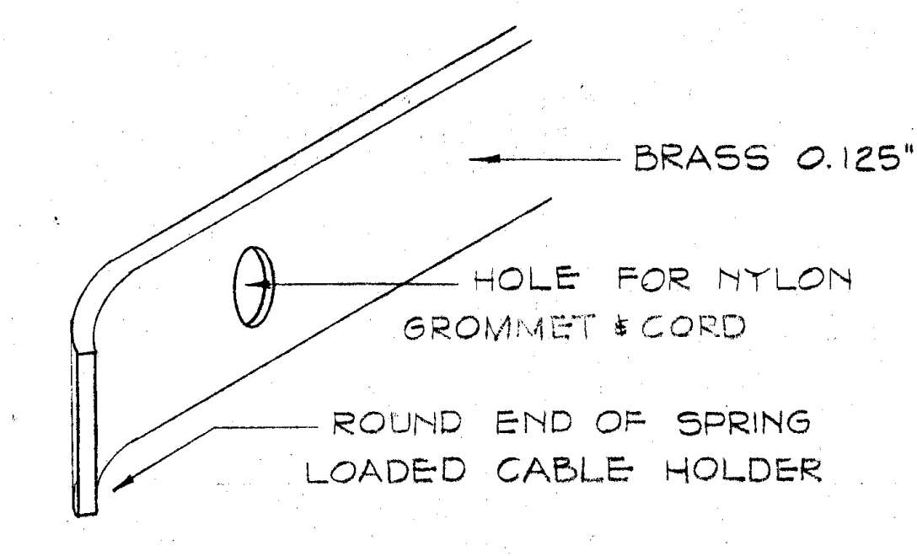
BRASS 0.125"
HOLE FOR NYLON GROMMET & CORD
ROUND END OF SPRING LOADED CABLE HOLDER

END OF CABLE HOLDER DETAIL N.T.S.

CANTILEVERED WALKWAY LIGHTING FIXTURE DETAILS SCALE AS NOTED (H / E-4)

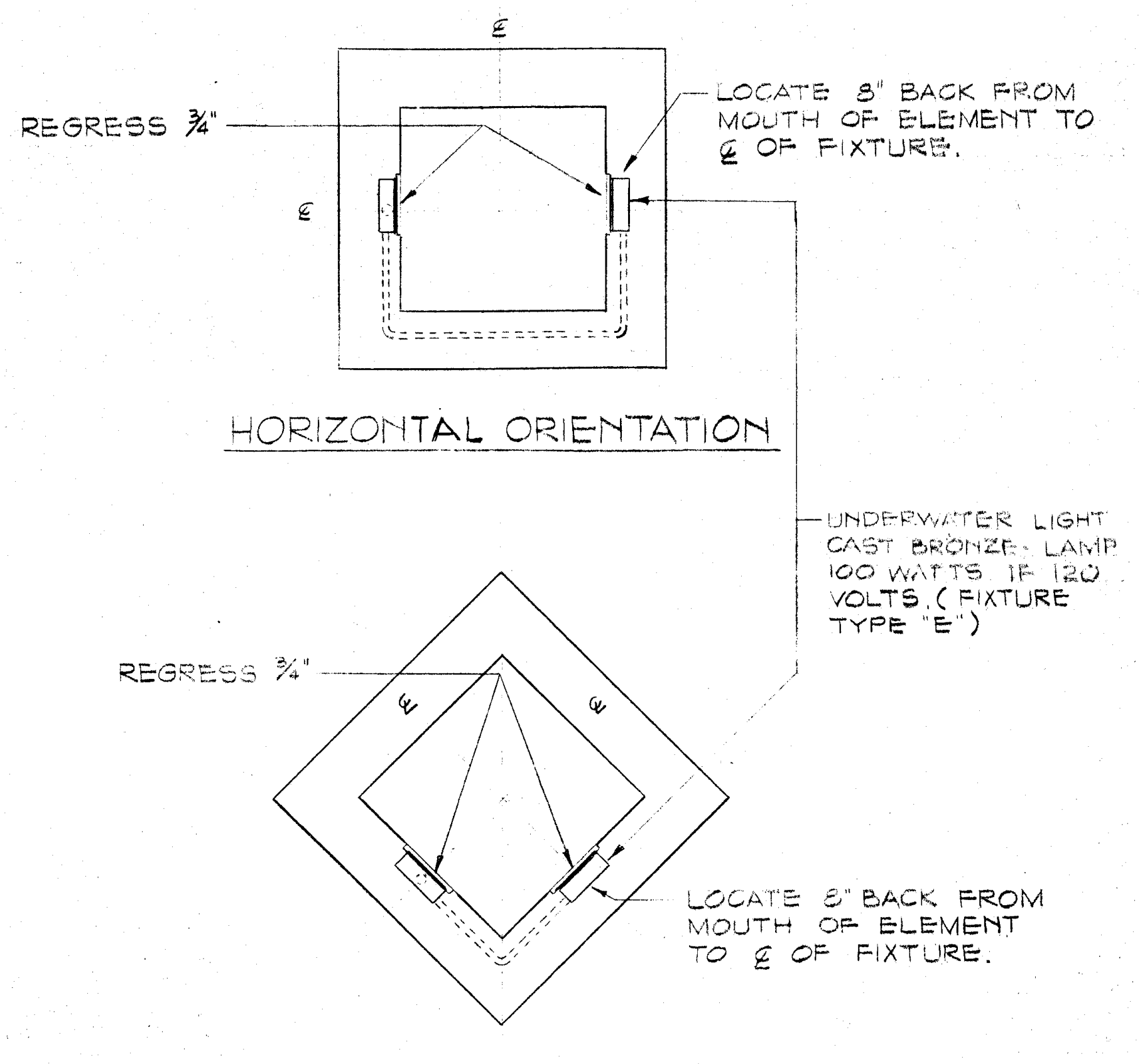
℄
REGRESS 3/4"
℄
LOCATE 8" BACK FROM MOUTH OF ELEMENT TO ℄ OF FIXTURE.
UNDERWATER LIGHT CAST BRONZE - LAMP 100 WATTS I.F. 120 VOLTS (FIXTURE TYPE "E")
REGRESS 3/4"
℄
℄
LOCATE 5" BACK FROM MOUTH OF ELEMENT TO ℄ OF FIXTURE.

HORIZONTAL ORIENTATION

"VEE" ORIENTATION

ELEMENT MOUTH LIGHTING DETAIL 1"=1'-0" (J / E-4)

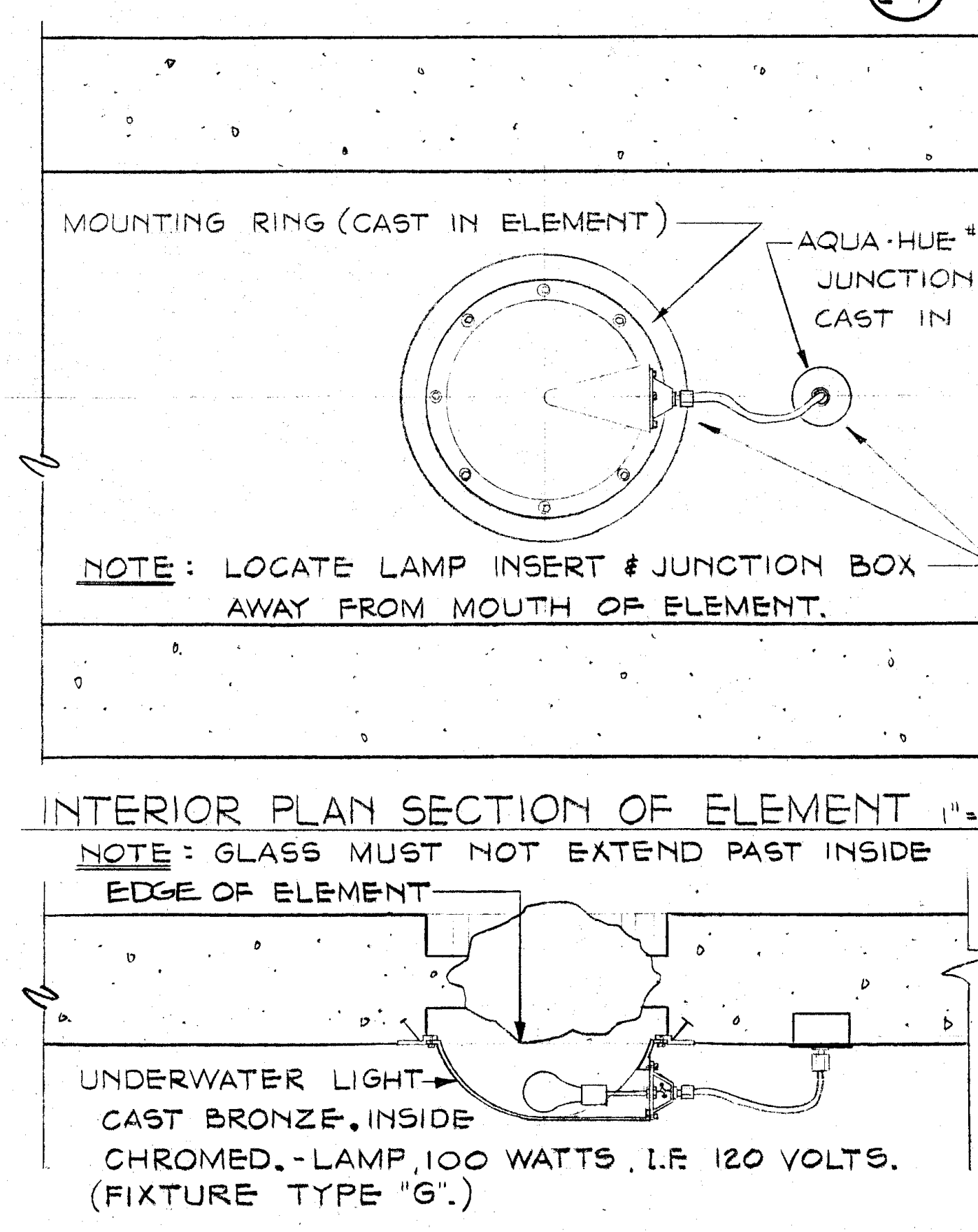
MOUNTING RING (CAST IN ELEMENT)
AQUA-HUE #1701 JUNCTION BOX CAST IN ELEMENT
EDGE OF ELEMENT
UNDERWATER LIGHT CAST BRONZE, INSIDE CHROMED. - LAMP 100 WATTS, I.F. 120 VOLTS. (FIXTURE TYPE "G".)

NOTE: LOCATE LAMP INSERT & JUNCTION BOX AWAY FROM MOUTH OF ELEMENT.

INTERIOR PLAN SECTION OF ELEMENT 1"=1'-0"

NOTE: GLASS MUST NOT EXTEND PAST INSIDE EDGE OF ELEMENT.

SECTION THROUGH ELEMENT WALL 1"=1'-0"

GLASS LIGHTING FIXTURE DETAIL 1"=1'-0" (K / E4)

No. 5
ELECTRICAL
STATE OF CALIFORNIA

EMBARCADERO PLAZA
EMBARCADERO LOWER MARKET APPROVED REDEVELOPMENT PROJECT AREA E1

LIGHTING DETAILS

SAN FRANCISCO REDEVELOPMENT AGENCY IN COOPERATION
WITH THE SAN FRANCISCO RECREATION AND PARK DEPARTMENT
AND SAN FRANCISCO DEPARTMENT OF PUBLIC WORKS

JOINT VENTURE ARCHITECTS:
LAWRENCE HALPRIN & ASSOCIATES
JOHN S. BOLLES ASSOCIATES
MARIO J. CIAMPI & ASSOCIATES

MECHANICAL AND ELECTRICAL ENG.
BEAMER • WILKINSON AND ASSO.
478 SANTA CLARA AVE
OAKLAND, CALIF 94610 415-834-4177

SCALE: AS NOTED
DATE: 25 JAN 1969
DRAWN BY: RC/VSD

E4

SHEET E-4 OF 4

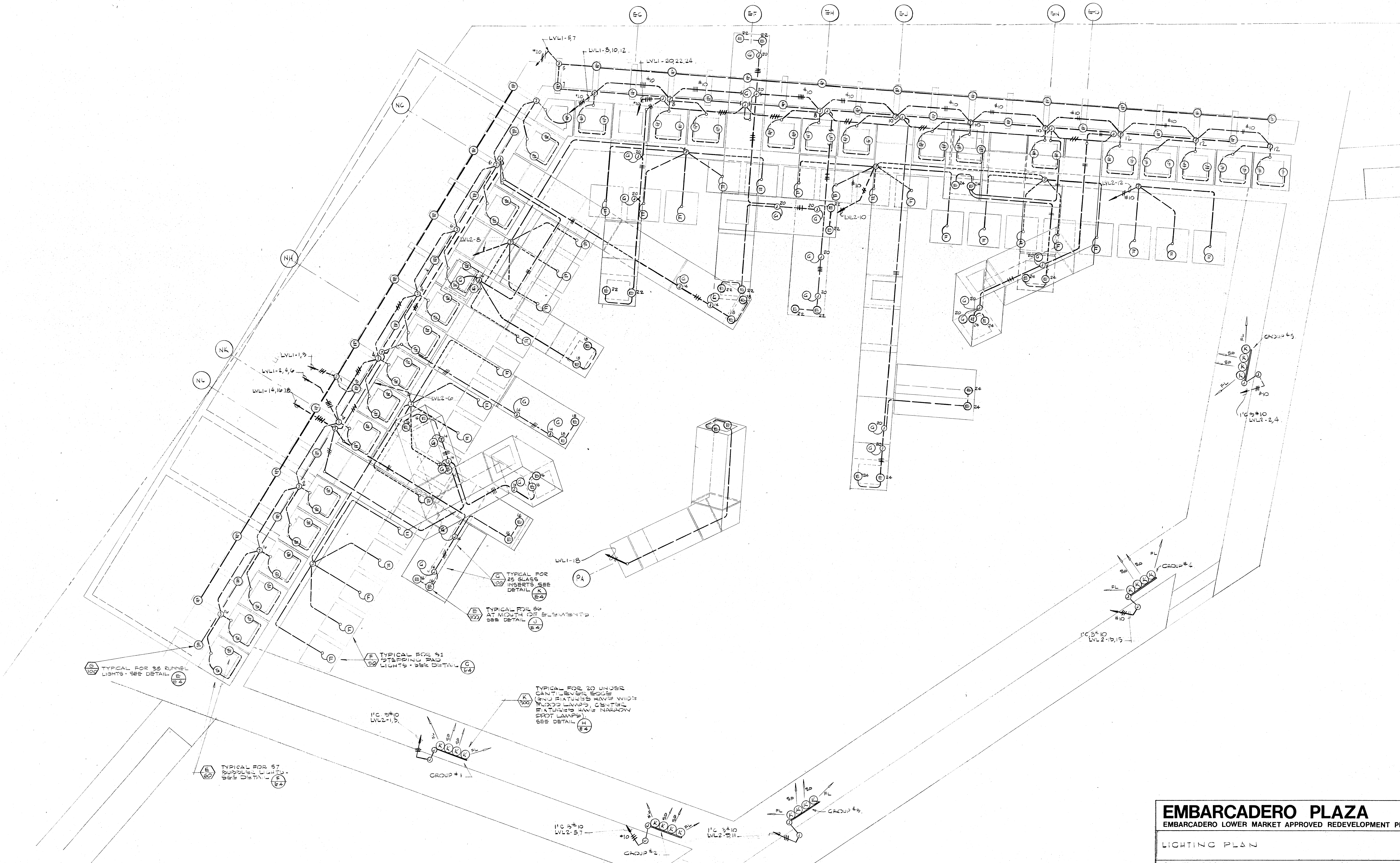
EC
EF
EH
EJ
EN
EQ
NC
NH
NK
NL
LVL1-5,7
LVL1-8,10,12
LVL1-20,22,24
LVL1-1,3
LVL1-2,4,6
LVL1-14,16,18
LVL2-8
LVL2-6
LVL2-10
LVL2-12
LVL1-18
PA
#10
TYPICAL FOR 25 GLASS INSERTS. SEE DETAIL K/E4
G/100
TYPICAL FOR 36 AT MOUTH OF ELEMENTS SEE DETAIL J/E4
E/100
TYPICAL FOR 31 STEPPING PAD LIGHTS - SEE DETAIL G/E4
F/50
TYPICAL FOR 38 RUNNEL LIGHTS - SEE DETAIL E/E4
G/100
TYPICAL FOR 57 BUBBLER LIGHTS - SEE DETAIL F/E4
E/60
TYPICAL FOR 20 UNDER CANTILEVER EDGE (END FIXTURES HAVE WIDE FLOOD LAMPS, CENTER FIXTURES HAVE NARROW SPOT LAMPS). SEE DETAIL H/E4
K/300
1"C. 3#10 LVL2-1,3.
GROUP #1
1"C 3#10 LVL2-5,7
GROUP #2.
1"C 3#10 LVL2-9,11
GROUP #3.
GROUP #4
1"C,3# 10 LVL 2-13,15
GROUP #5.
1"C 3#10 LVL2-2,4.
FL
SP

FOUNTAIN LIGHTING PLAN

SCALE: 1/4" = 1'-0".

NOTE: FOR SCULPTURE ELEMENT ELEVATIONS SEE SHEET M3. FOR CONDUIT PENTRATION DETAIL SEE SHEET M5. ADDITIONAL INFO. FOR ELEMENTS IS INCLUDED IN ARCHITECTURAL AND STRUCTURAL SHEETS.

SCOTT BEAMER
No. 5

EMBARCADERO PLAZA

EMBARCADERO LOWER MARKET APPROVED REDEVELOPMENT PROJECT AREA E1

SCALE: AS NOTED
DATE: 25 JAN. 1969
DRAWN BY: RC/VSD

LIGHTING PLAN

SAN FRANCISCO REDEVELOPMENT AGENCY IN COOPERATION
WITH THE SAN FRANCISCO RECREATION AND PARK DEPARTMENT
AND SAN FRANCISCO DEPARTMENT OF PUBLIC WORKS

JOINT VENTURE ARCHITECTS:
LAWRENCE HALPRIN & ASSOCIATES
JOHN S. BOLLES ASSOCIATES
MARIO J. CIAMPI & ASSOCIATES

MECHANICAL AND ELECTRICAL ENG.
BEAMER • WILKINSON AND ASSO.
478 SANTA CLARA AVE
OAKLAND, CALIF 94610 PH. 415-834-4177

E3

SHEET E3 OF 4

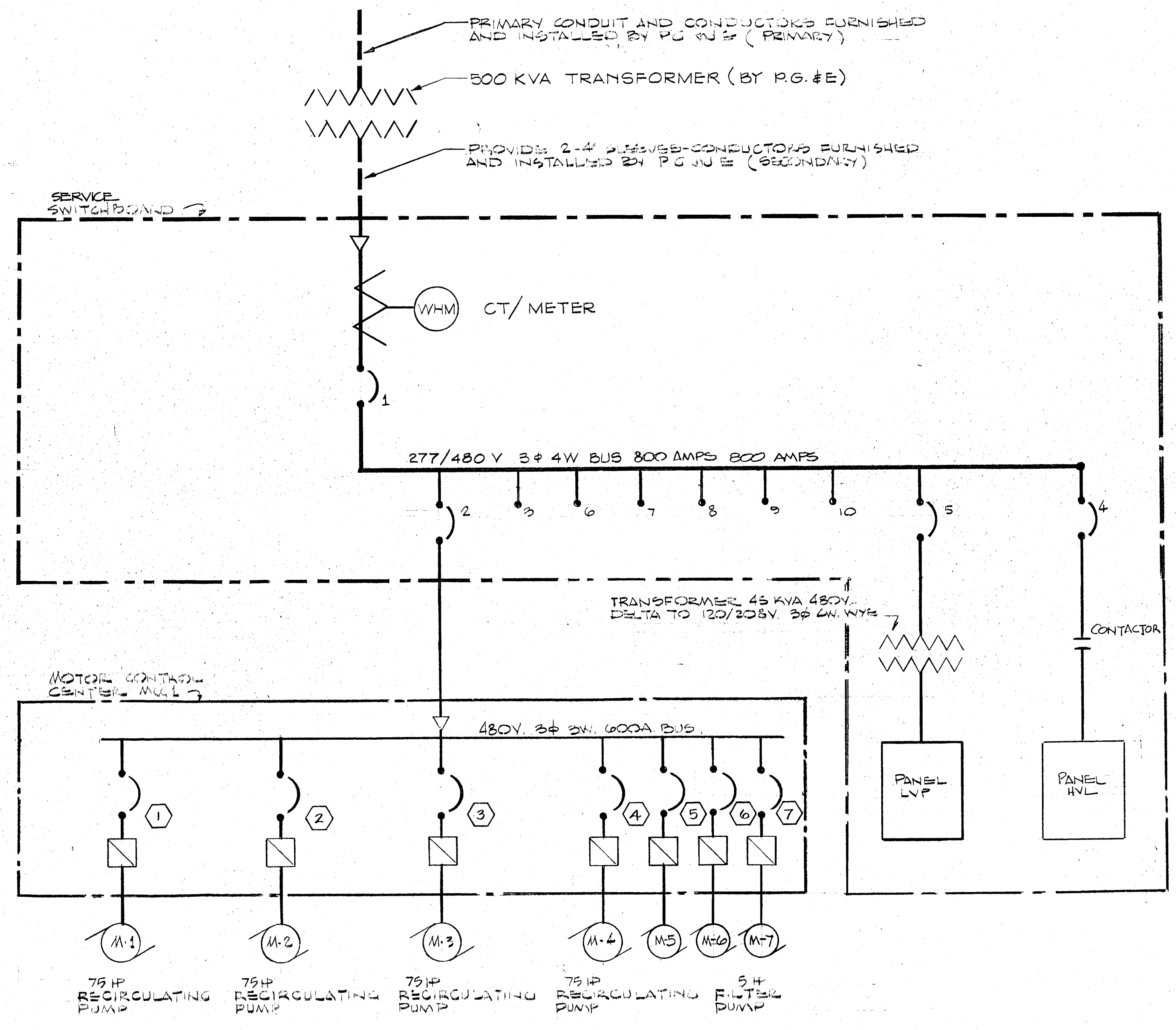
PRIMARY CONDUIT AND CONDUCTORS FURNISHED AND INSTALLED BY PG&E (PRIMARY)
500 KVA TRANSFORMER (BY P.G.&E)
PROVIDE 2-4" SLEEVES-CONDUCTORS FURNISHED AND INSTALLED BY PG&E (SECONDARY)
SERVICE SWITCHBOARD
WHM
CT/METER
277/480 V 3φ 4W BUS 800 AMPS 800 AMPS
1 2 3 6 7 8 9 10 5 4
TRANSFORMER 45 KVA 480V. DELTA TO 120/208V. 3φ 4W. WYE
CONTACTOR
MOTOR CONTROL CENTER MCC-1
480V. 3φ 3W. 600A BUS
PANEL LVP
PANEL HVL
M-1 M-2 M-3 M-4 M-5 M-6 M-7
75 HP RECIRCULATING PUMP
75 HP RECIRCULATING PUMP
75 HP RECIRCULATING PUMP
75 HP RECIRCULATING PUMP
5 HP FILTER PUMP

ELECTRICAL ONE LINE DIAGRAM
NO SCALE

NOTES:
1.) PROVIDE TIME DELAY RELAYS TO SEQUENTIALLY START M1, M2, M3 AND M4.
2.) SHORT CIRCUIT RATING FOR SERVICE SWITCHBOARD AND MOTOR CONTROL CENTER SHALL BE 50,000 A SYM.
3.) SERVICE SWITCHBOARD AND MOTOR CONTROL CENTER SHALL BE SECURELY BOLTED TO FLOOR.

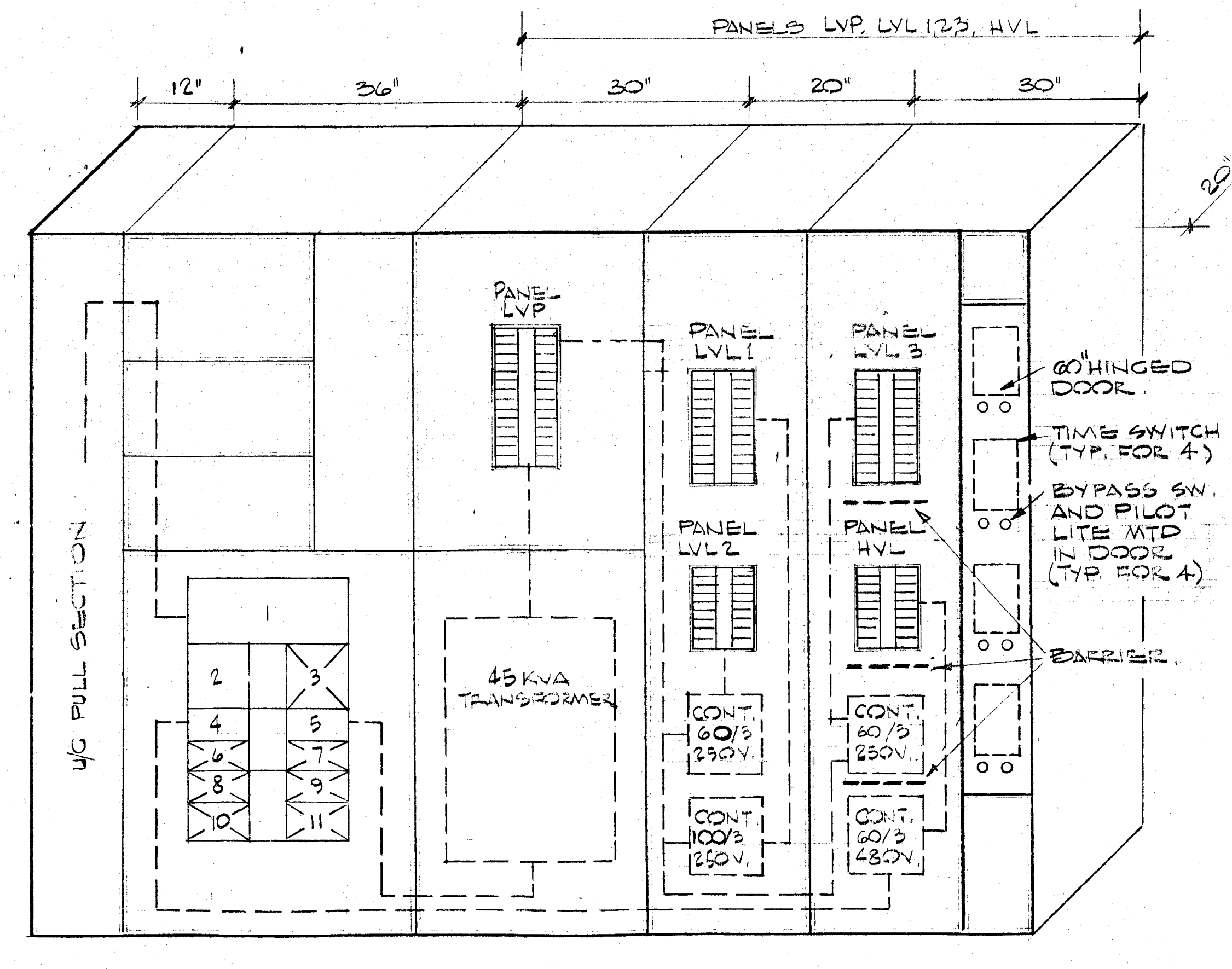
PANELS LVP, LVL 1,2,3, HVL
12"
36"
30"
20"
30"
PANEL LVP
PANEL LVL1
PANEL LVL3
PANEL LVL2
PANEL HVL
45 KVA TRANSFORMER
CONT. 60/3 250V.
CONT. 100/3 250V.
CONT. 30/3 480V.
90° HINGED DOOR
TIME SWITCH (TYP. FOR 4)
BYPASS SW. AND PILOT LITE MTD IN DOOR (TYP. FOR 4)
BARRIER
U/C PULL SECTION

SERVICE SWITCHBOARD
SCALE: 3/4" = 1'-0"

MAIN SWITCHBOARD FEEDER SCHEDULE					
C/B	FRAME	TRIP	LOAD	FEEDER	LOAD (KW)
1	800	600	MAIN	8-350 MCM*	358.7
2	600	600	MCC-1	6-350 MCM	331
3	400	—	SPACE	—	—
4	100	100	PANEL HVL	4 #2	2.4
5	225	150	PANEL LVP VIA TRANSFORMER	4-#1/0	34.6
6 - 11	225	—	SPACE(S) ONLY	—	—

* BY P.G.&E

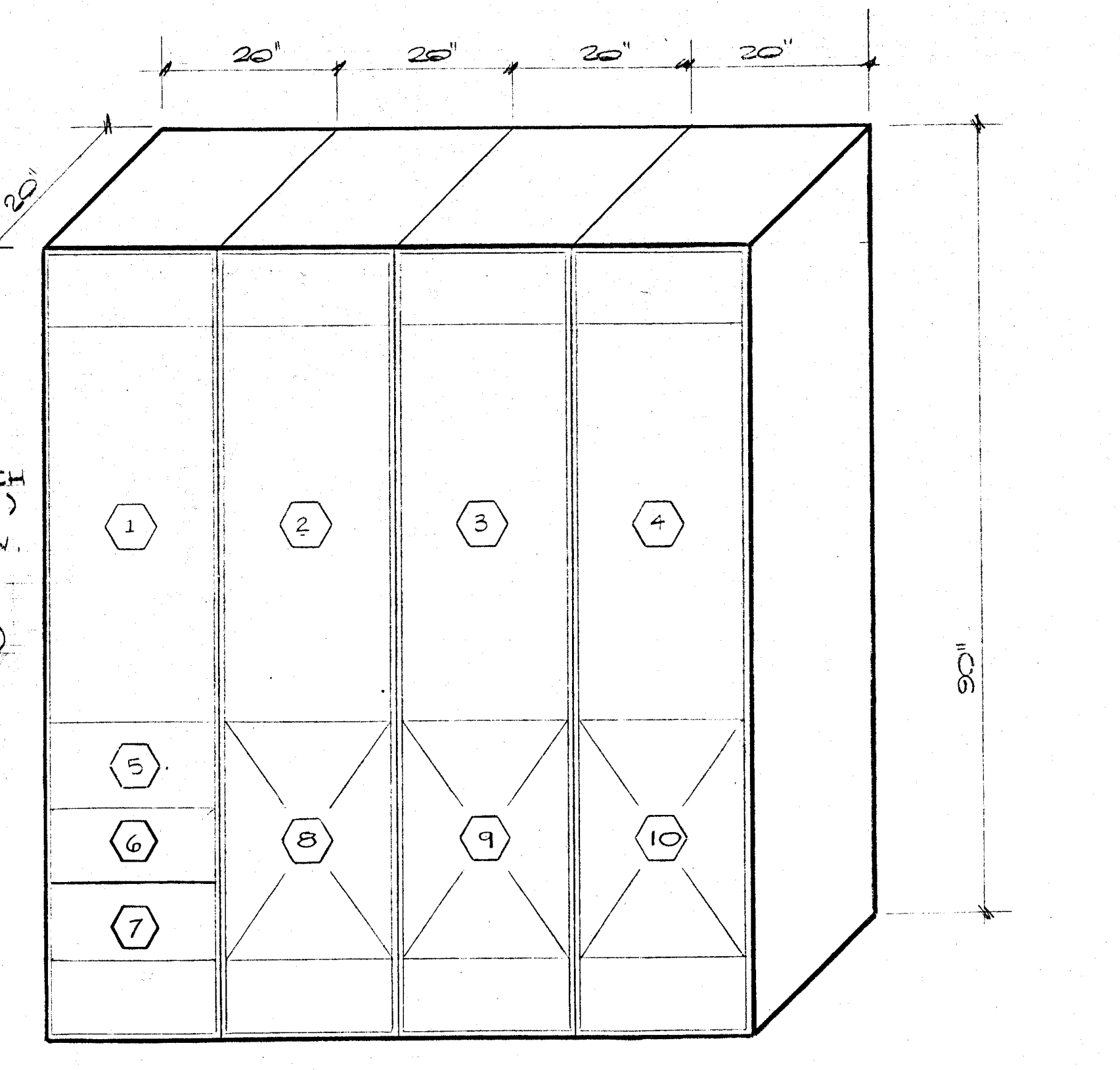
20"
20"
20"
20"
20"
90"
1
2
3
4
5
6
7
8
9
10

MOTOR CONTROL CENTER MCC-1
SCALE: 3/4" = 1'-0"

MCC-1 FEEDER SCHEDULE							
UNIT NUMBER	STARTER SIZE	CB FRAME	CB TRIP	EQUIPMENT	FEEDERS	LOAD	MOTOR SIZE
⟨1⟩	3 PW	225	200	PUMP #1	6 #1/0	79 KVA	75 HP
⟨2⟩	3 PW	225	200	PUMP #2	6 #1/0	79 KVA	75 HP
⟨3⟩	3 PW	225	200	PUMP #3	6 #1/0	79 KVA	75 HP
⟨4⟩	3 PW	225	200	PUMP #4	6 #1/0	79 KVA	75 HP
⟨5⟩	1	50	30	FILTER PUMP	3-#12	5.7 KVA	5 HP
⟨6⟩	1	50	20	SUMP PUMP	3 -#12	2.3 KVA	2 HP
⟨7⟩	1	50	20	SUMP PUMP	3 -#12	2.3 KVA	—
⟨8⟩-⟨10⟩	—	—	—	SPACE ONLY	—	—	—

TOTAL 331 KVA

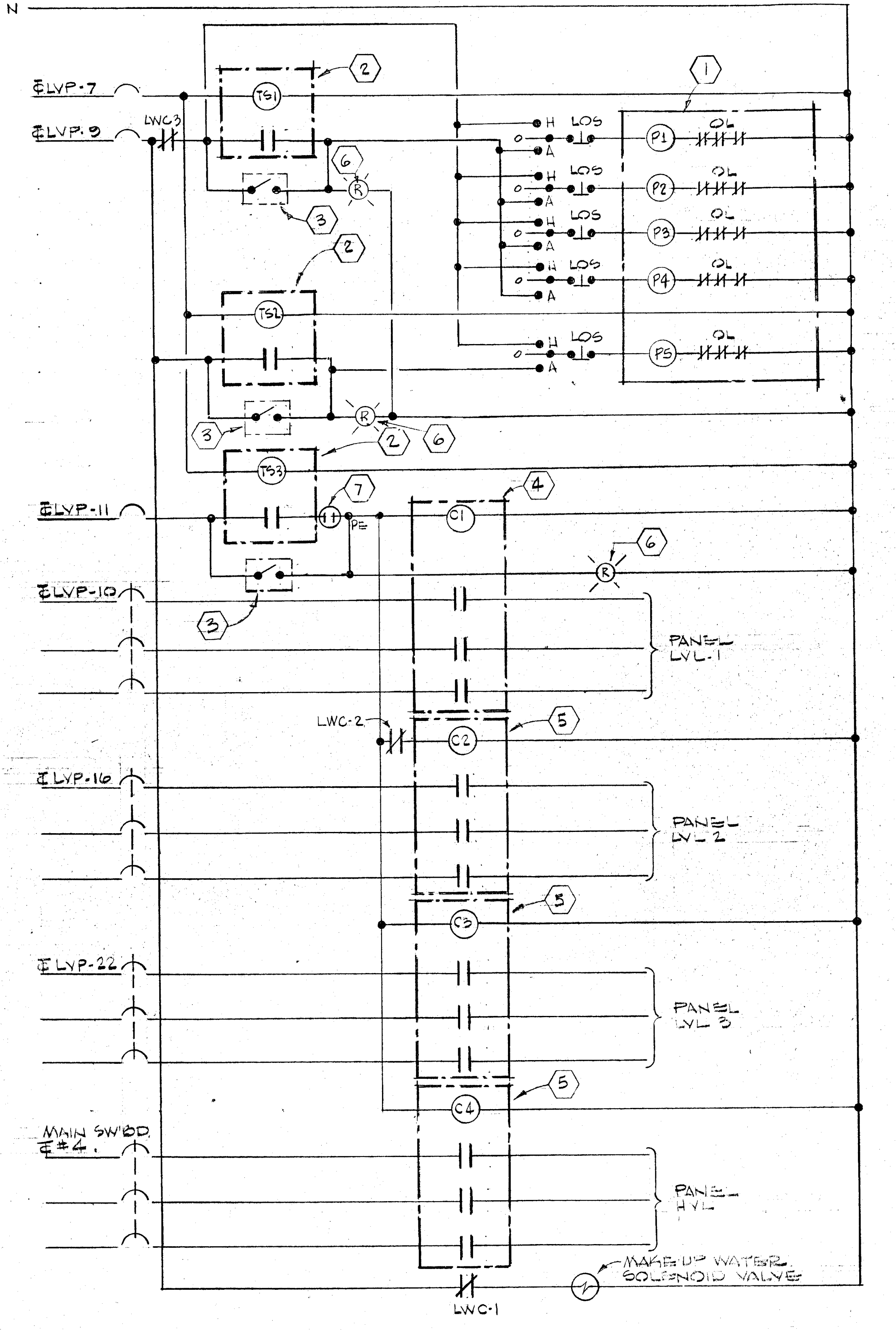
N
≡LVP-7
≡LVP-9
LWC-3
TS1
TS2
TS3
H
A
LOS
OL
P1
P2
P3
P4
P5
≡LVP-11
≡LVP-10
LWC-2
C1
C2
C3
C4
PANEL LVL-1
≡LVP-16
PANEL LVL-2
≡LVP-22
PANEL LVL-3
MAIN SW'BD ≡#4
PANEL HVL
MAKE-UP WATER SOLENOID VALVE
LWC-1

FOUNTAIN CONTROL DIAGRAM
N.T.S.

⟨1⟩ PUMP MOTOR STARTERS SEE MCC ELEVATION AND SCHEDULE, THIS SHT.

⟨2⟩ TIME SWITCH SPST SANGAMO #W-11.

⟨3⟩ TIME SWITCH BYPASS SW. SPST WESTINGHOUSE OT2 SIA OR EQUAL.

⟨4⟩ REMOTE CONTROL SW. ASCO BULLETIN 920-114, 100A 3P # 9201 PR9.

⟨5⟩ REMOTE CONTROL SWITCH ASCO BULLETIN 920-114 60A 3P # 922 PR9.

⟨6⟩ RED PILOT LIGHT WESTINGHOUSE OTFF2 OR EQUAL.

⟨7⟩ PHOTOELECTRIC CELL MOUNTED ON FLAGPOLE.

PANEL-LVL1 (MAIN SW. BD.)
TYPE NAIB 120/208V. 3φ 4W. 100A. BUS.

LOAD	KW	CB	№	№	CB	KW	LOAD
RUNNEL LIGHTS	0.9	20/1	1	2	20/1	.72	BUBBLER ELEMENT LTS
	0.9		3	4		.6	
	1.0		5	6		.42	
	1.0		7	8		0.5	
FLAG POLE UP LIGHTS	0.75		9	10		0.43	
	0.75		11	12		0.6	
	0.75		13	14		1.1	GLASS IN ELEMENTS - NORTH
	0.75		15	16		0.8	MOUTHS OF ELEM. - NORTH
SPARE			17	18		0.8	
			19	20		1.3	GLASS IN ELEMENTS - E
			21	22		1.0	MOUTHS OF ELEM - EAST
			23	24		1.0	

S/N

TOTAL φA 7.45 KW
φB 6.00 KW
φC 5.25 KW

PANEL-LVL 2 (MAIN SW'BD.)
TYPE NAIB 120/208V. 3φ 4W. 100A. BUS.

LOAD	KW	CB	№	№	CB	KW	LOAD
#1 SPOTS UNDER CANTILEVER EDGE	0.6	20/1	1	2	20/1	0.6	#5 SPOTS UNDER CANTILEVER EDGE
#1 FLOODS UNDER CANTILEVER EDGE	0.6		3	4		0.6	#5 FLOODS UNDER CANTILEVER EDGE
#2 SPOTS UNDER CANTILEVER EDGE	0.6		5	6		0.5	STEPPING PAD LTS.
#2 FLOODS UNDER CANTILEVER EDGE	0.6		7	8		0.45	
#3 SPOTS UNDER CANTILEVER EDGE	0.6		9	10		0.45	
#3 FLOODS UNDER CANTILEVER EDGE	0.6		11	12		0.15	
#4 SPOTS UNDER CANTILEVER EDGE	0.6		13	14			SPARE
#4 FLOODS UNDER CANTILEVER EDGE	0.6		15	16			
SPARE			17	18			

S/N

TOTALS φA 2.85 KW
φB 2.85 KW
φC 1.85 KW

PANEL-LVL3 (MAIN SW'BD.)
TYPE NAIB 120/208V. 3φ 4W 100A BUS

LOAD	KW	CB	№	№	CB	KW	LOAD
FLAG POLE DN. LIGHTS	0.45	20/1	1	2	20/1	0.2	SCULPTURE STAND LTS.
	0.45		3	4		0.15	STEP LTS. AT WALL
	0.45		5	6		0.15	
	0.45		7	8			SPARE
SPARE			9	10			
			11	12			
SPARE			13	14			SPACES
			15	16			
			17	18			
			19	20			
			21	22			
			23	24			

S/N

TOTALS φA 1.1 KW
φB 0.6 KW
φC 0.6 KW

NOTE: PROVIDE LOCK OUTS FOR FOUNTAIN & PLAZA CIRCUITS AND PLAZA RECEPTACLE CIRCUITS.

PANEL.HVL (MAIN SW'BD.)
TYPE NHIB 277/480V. 3φ 4W SURFACE MOUNTED 100 BUS

LOAD	KW	CB	№	№	CB	KW	LOAD
PLAZA PYLON LIGHTS	1.0	20/1	1	2	20/1		SPARE
	1.0		3	4			
	1.0		5	6			
SPARE			7	8			
			9	10			
SPACE			11	12			SPACE
			13	14			
			15	16			
			17	18			

S/N

TOTALS φA .8 KW
φB .8 KW
φC .8 KW

PANEL.LVP (MAIN SW'BD.)
TYPE NAIB 120/208V. 3φ 4W SURFACE MOUNTED 225A. BUS

LOAD	KW	CB	№	№	CB	KW	LOAD
EQUIPMENT VAULT LTG.	0.3	20/1	1	2	20/1	0.8	EQUIP'T. VAULT RECEPTS
" " " "	1.5		3	4		0.4	PG&E VAULT RECEPTS.
" " " "	1.5		5	6		0.4	" " " " LTG.
TIME CLOCKS	0.5		7				
PUMP CONTROL/MAKE UP	0.5		9	10	100/3	17.7	PANEL LVL 1
LIGHTING CONTROL	0.5		11				
PLAZA RECEPTS.	0.2		13				
" "	0.2		15	16	70/3	7.6	PANEL LVL 2
" "	0.2		17				
IRRIGATION CONTROLLER	0.5		19				
EXHAUST FAN	1.2	30/1	21	22	70/3	2.3	PANEL LVL 3
SPACE HEATERS	0.5	20/1	23				
	0.5		25	26	20/1		SPARE
	0.5		27	28			
	0.5		29	30			

S/N

TOTALS φA 13.8
φB 11.9
φC 10.1

LIGHTING FIXTURE SCHEDULE					
SYMBOL	MANUFACTURER	CAT. NO.	LAMPS	FINISH	REMARKS
A 250/150	MOLDCAST	779	Q250 PAR 38 FLOOD (UP) 150 PAR 38 FLOOD (DOWN)	AS SELECTED BY ARCH.	SPECIAL MOUNTING BRACKETS FOR FLAGPOLE INSTALLATION @ +35' SEE DETAIL 'A' SHT. E4 PROVIDE CONCENTRIC LOUVRE GUARD.
B 150	SIMES	44736B	150 PAR 38/3 FL.	NATURAL BRONZE	WALL STEP LTS SEE DETAIL 'B' SHEET E-4
C 325	AQUA-HUE OR PEERLESS	SPECIAL	LU 275/BD		PYLON FIXTURE - SEE ARCH. SHTS AND DETAIL 'C' SHEET E4
D 50	SIMES	44736B (MODIFIED)	50 PAR 36 NSP (12V.)	NATURAL BRONZE	MOUNT IN SCULPTURE BASE - FIXTURE MODIFIED TO ACCEPT 12V. TRANSFORMER AND LAMP - PROVIDE 1"X1" EGG CRATE LOUVERS IN DOOR IN LIEU OF STANDARD - SEE DETAIL "D" SHEET E4
E	AQUA-HUE	4414 W/ CAST BRONZE LOUVER FRONT	100A 21/99 60A19/99 (BUBBLERS)	NATURAL BRONZE	SUITABLE FOR SUBMERGED OR DRY APPLICATIONS USED @ RUNNEL, BUBBLERS AND ELEMENT MOUTHS. SEE DETAILS E, F, & J SHEET E4.
F 50	AQUA-HUE	4418-3	50 R20	NATURAL BRONZE	NICHE MOUNTED - NICHE PRE CAST IN STEPPING PADS SEE DETAIL "G" SHEET E4. PROVIDE FIXTURE RETENTION DEVICE AS REQUIRED FOR LENS-DN. MT'G.
G 100	AQUA-HUE	SPECIAL	100A 21/99 (A-21)	NATURAL BRONZE	SPECIAL CAST BRONZE FIXTURE - FOR GLASS INSERTS - SEE DETAIL "K" SHEET E4.
H 2-40	COLUMBIA	55A-236CW -M4	2-F48T12 CW	ALUM.	IN EQUIP'T. VAULT - FURNISH WITH WIRE GUARD. SUSPEND BELOW PIPE OBSTRUCTIONS
K 300	STONCO	WB5802-E	300 PAR56/WFL 300 PAR56/NSP	NATURAL BRONZE	BELOW WALKWAY - SEE DETAIL "H" SHEET E4 SPOTS OR FLOODS AS INDICATED ON PLAN.
L 150	CROUSE-HINDS	EVCX-105	1-150 WIF	WALL OR CEILG. SURFACE	EXPLOSION PROOF

SYMBOLS

○ EP	INCANDESCENT LIGHT, EXPLOSION PROOF.
▭○▭	FLUORESCENT LIGHT.
$	SINGLE POLE TOGGLE SWITCH.
$₂	DOUBLE POLE TOGGLE SWITCH.
⊖	DUPLEX RECEPTACLE 120V. 3W GROUNDED.
LOS ▣	LOCK OUT STOP.
Ⓜ	MOTOR.
Ⓙ	JUNCTION BOX
——	EXPOSED CONDUIT
- - -	CONDUIT CONCEALED IN SLAB.
A 150	FIXTURE DESIGNATION & WATTAGE.

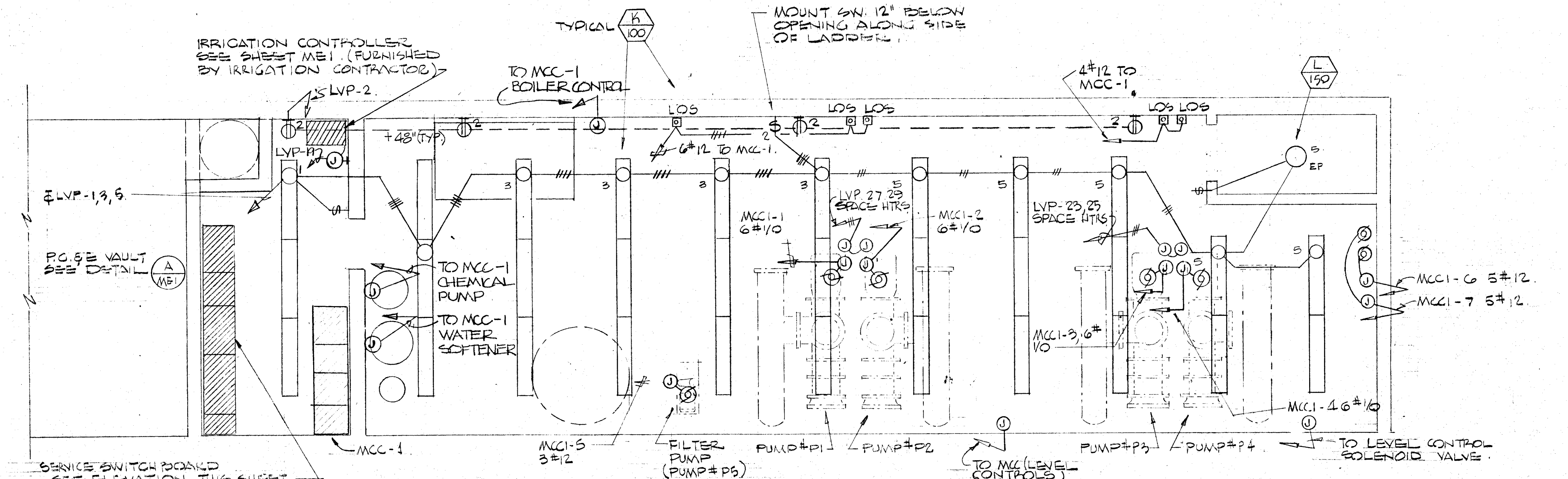
IRRIGATION CONTROLLER SEE SHEET ME1 (FURNISHED BY IRRIGATION CONTRACTOR)
≡LVP-2
TO MCC-1 BOILER CONTROL
TYPICAL K 100
MOUNT SW. 12" BELOW OPENING ALONG SIDE OF LADDER.
4#12 TO MCC-1
L 150
LOS
≡LVP-1,3,5
P.G.&E. VAULT SEE DETAIL A
TO MCC-1 CHEMICAL PUMP
TO MCC-1 WATER SOFTENER
MCC-1 6#10
LVP 27 29 SPACE HTRS
MCC-1 6#10
LVP-25 SPACE HTRS
MCC1-6 3#12
MCC1-7 3#12
MCC1-4 6#10
MCC-1
MCC1-5 3#12
FILTER PUMP (PUMP #P5)
PUMP #P1
PUMP #P2
TO MCC LEVEL CONTROLS
PUMP #P3
PUMP #P4
TO LEVEL CONTROL SOLENOID VALVE
SERVICE SWITCHBOARD SEE ELEVATION, THIS SHEET.
EP

EQUIPMENT VAULT ELECTRICAL PLAN
SCALE: 1/4" = 1'-0"

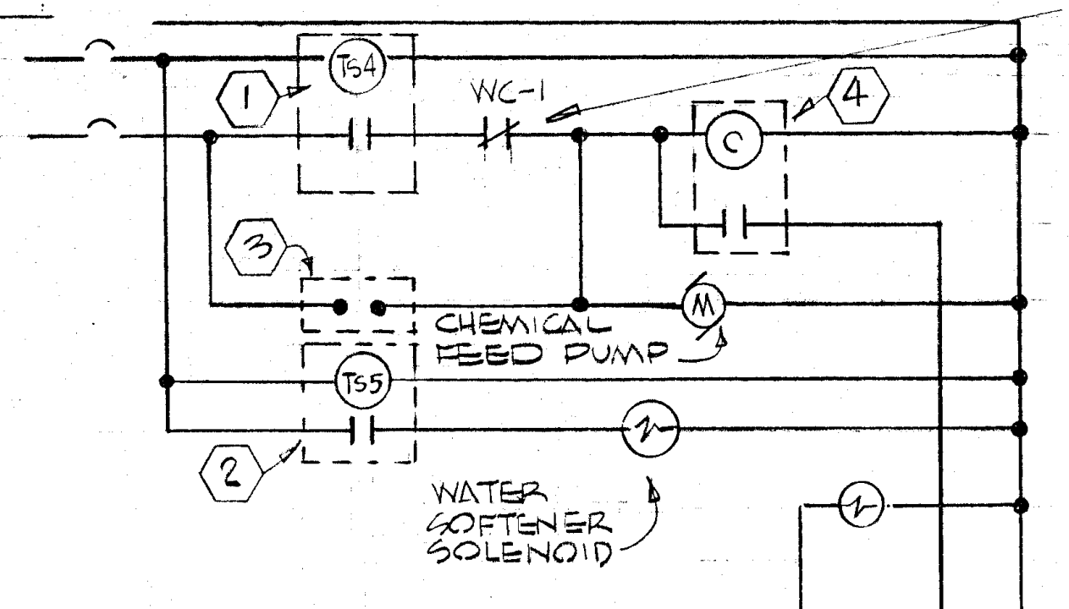
WIND CONTROL AQUA-NO. WC-2 SEE GENERATOR A-E2
TS4
WC-1
C
TS5
M
CHEMICAL FEED PUMP
WATER SOFTENER SOLENOID
H N
115V

⟨1⟩ TIME CLOCK, SANGAMO #W-12 OR APPROVED EQUAL.

⟨2⟩ TIME CLOCK (PROVIDED WITH SOFTENER, BY MECHANICAL CONTRACTOR.)

⟨3⟩ TIME CLOCK BYPASS SWITCH, SPST ARROW HART #1991

⟨4⟩ EAGLE TIMER, BULLETIN 170, FORM 42#, HD 42A621 CONTACT OPENS ON DE-ENERGIZATION AND RESETS AUTOMATICALLY AFTER 30 MINUTES.

BOILER CONTROL DIAGRAM

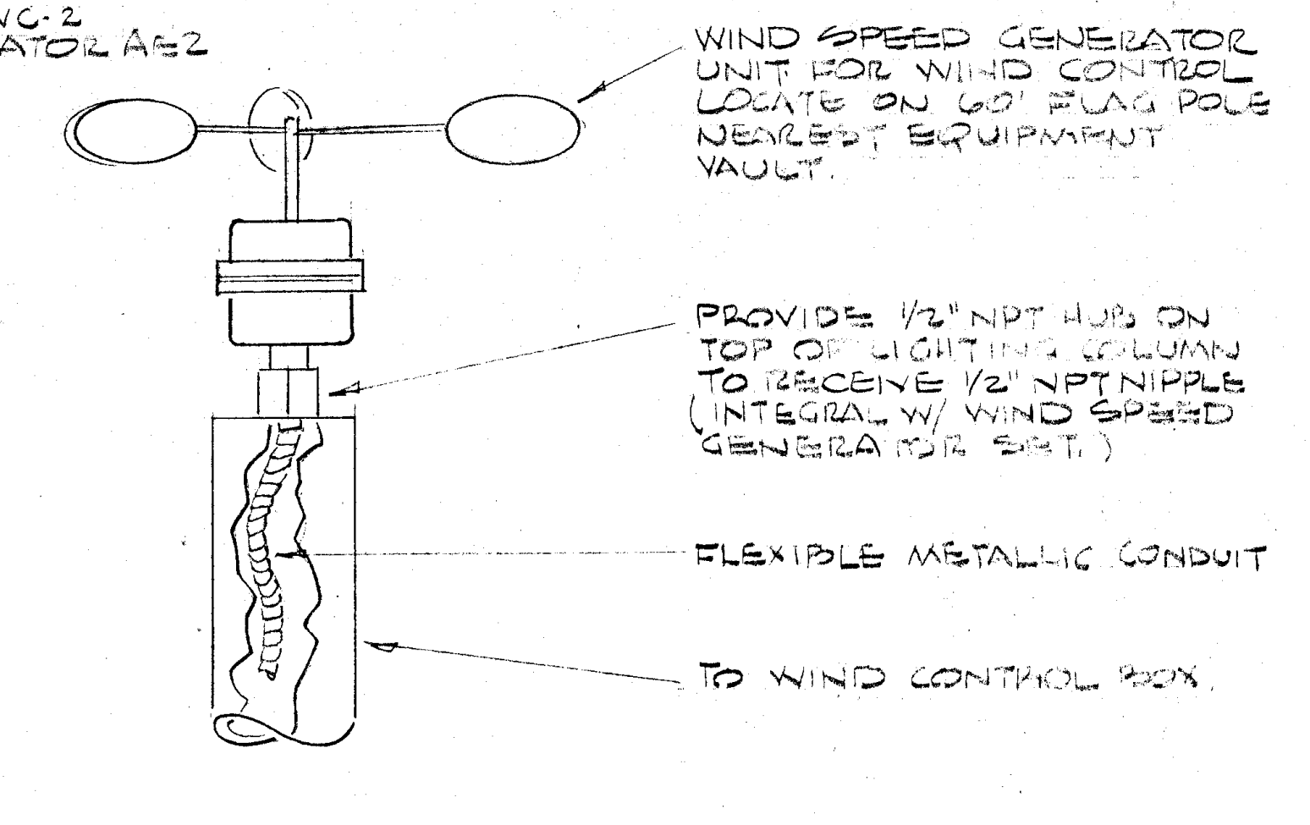
WIND SPEED GENERATOR UNIT FOR WIND CONTROL LOCATE ON 1ST FLAG POLE NEAREST EQUIPMENT VAULT.
PROVIDE 1/2" NPT HUB ON TOP OF LIGHTING COLUMN TO RECEIVE 1/2" NPT NIPPLE (INTEGRAL W/ WIND SPEED GENERATOR SHT.)
FLEXIBLE METALLIC CONDUIT
TO WIND CONTROL BOX

WIND GENERATOR MOUNTING DETAIL A/E2

EMBARCADERO PLAZA
EMBARCADERO LOWER MARKET APPROVED REDEVELOPMENT PROJECT AREA E1

ELECTRICAL ONE LINE AND EQUIPMENT DETAILS

SAN FRANCISCO REDEVELOPMENT AGENCY IN COOPERATION
WITH THE SAN FRANCISCO RECREATION AND PARK DEPARTMENT
AND SAN FRANCISCO DEPARTMENT OF PUBLIC WORKS

JOINT VENTURE ARCHITECTS:
LAWRENCE HALPRIN & ASSOCIATES
JOHN S. BOLLES ASSOCIATES
MARIO J. CIAMPI & ASSOCIATES

MECHANICAL AND ELECTRICAL ENG.
BEAMER • WILKINSON AND ASSO.
478 SANTA CLARA AVE.
OAKLAND, CALIF. 94610 415-834-4177

SCALE: AS NOTED
DATE:
DRAWN BY: RC/VSD

E2

SHEET E2 OF

EMBARCADERO PLAZA

EMBARCADERO LOWER MARKET APPROVED REDEVELOPMENT PROJECT AREA E-1

THE SAN FRANCISCO REDEVELOPMENT AGENCY IN COOPERATION
WITH THE SAN FRANCISCO RECREATION AND PARK DEPARTMENT
AND SAN FRANCISCO DEPARTMENT OF PUBLIC WORKS

SCHEDULE OF DRAWINGS

ARCHITECTURAL

1 DEMOLITION PLAN
2 LAYOUT PLAN
3 GRADING & DRAINAGE PLAN
4 ELEVATIONS
5 DETAILS
6 POOL PLAN
7 FOUNTAIN PLAN
8 SCULPTURE ELEVATIONS
9 SCULPTURE ELEVATIONS
10 ISOMETRICS OF SCULPTURE UNITS
11 MISCELLANEOUS DETAILS
12 MISCELLANEOUS DETAILS

STRUCTURAL

S 1 POOL FOUNDATION PLAN
S 2 POOL PLAN AT COPING LEVEL
S 3 POOL SECTIONS
S 4 POOL BEAMS & MISCELLANEOUS DETAILS

CONCRETE SCULPTURE

S 1 PLAN
S 2 ELEVATIONS
S 3 PLANS & ELEVATIONS
S 4 PLANS & ELEVATIONS
S 5 PLANS, ELEVATIONS & DETAILS
S 6 SECTIONS & DETAILS - POST TENSIONED ELEMENTS
S 7 SECTIONS & DETAILS - STEEL LINED ELEMENTS
S 8 BASE, FOUNDATIONS, SECTIONS & DETAILS

MECHANICAL

ME 1 PLAZA MECHANICAL & ELECTRICAL PLAN
M 2 FOUNTAIN PIPING PLAN
M 3 FOUNTAIN PIPING ELEVATIONS
M 4 PUMPING VAULT PLAN & SECTIONS
M 5 MECHANICAL DETAILS & STEAM SYSTEM
M 6 MECHANICAL DETAILS

ELECTRICAL

E 2 ELECTRICAL ONE-LINE & EQUIPMENT DETAILS
E 3 LIGHTING PLAN
E 4 LIGHTING DETAILS

LANDSCAPE

L 1 PLANTING PLAN & DETAILS
L 2 IRRIGATION PLAN & DETAILS

APPROVED BY THE REDEVELOPMENT AGENCY
OF THE CITY AND COUNTY OF SAN FRANCISCO
M. Justin Herman
M. JUSTIN HERMAN · EXECUTIVE DIRECTOR

JOINT VENTURE ARCHITECTS

LAWRENCE HALPRIN & ASSOCIATES
1620 MONTGOMERY ST SAN FRANCISCO

JOHN S BOLLES ASSOCIATES
14 GOLD ST SAN FRANCISCO

MARIO J CIAMPI & ASSOCIATES
425 BUSH ST SAN FRANCISCO

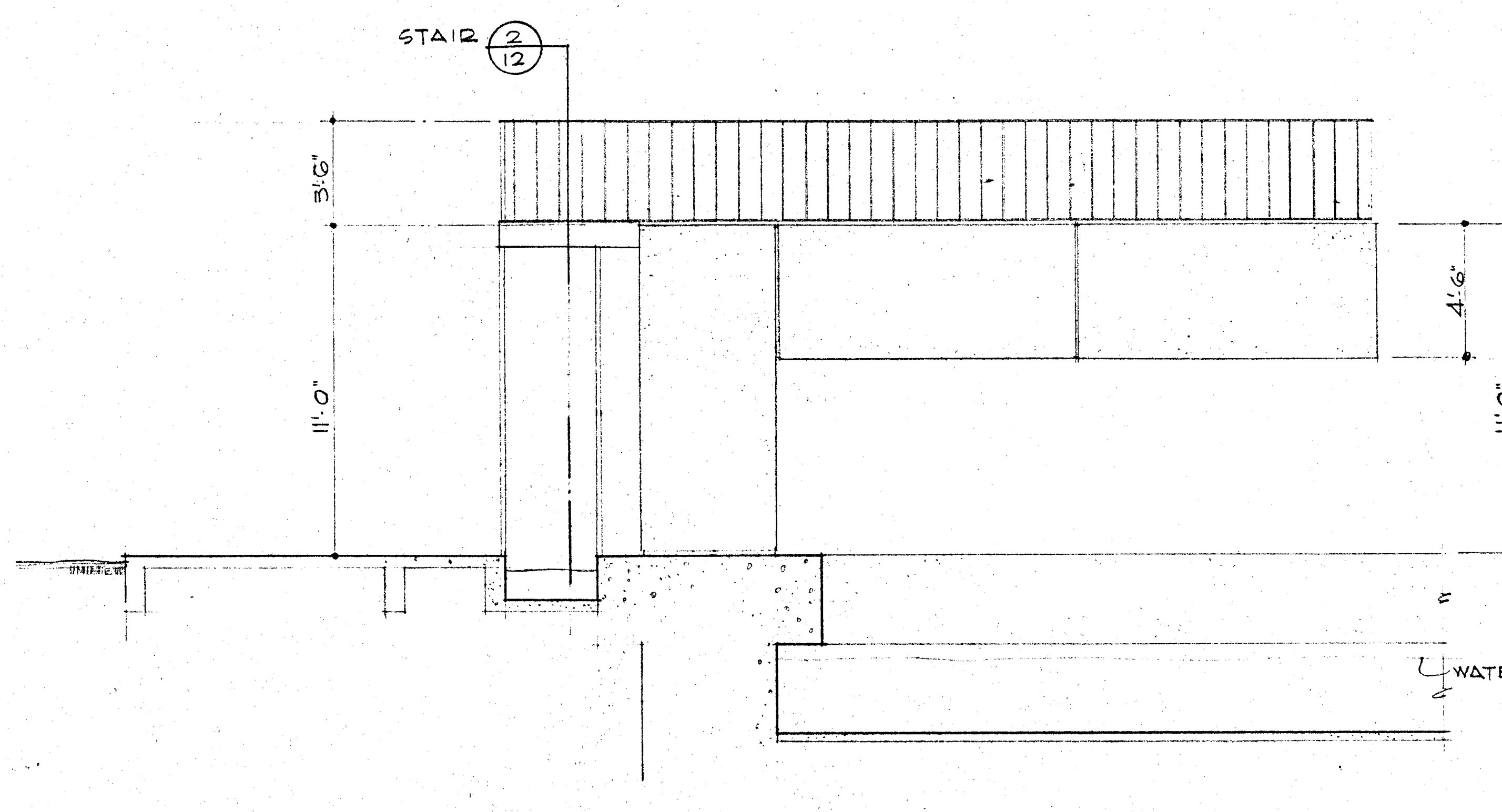
STAIR 2/12
3'-6"
4'-6"
11'-0"
WATER

4/12 ELEV. ℄ RAIL AT SCULPTURE ELEMENTS
1/4" = 1'-0"

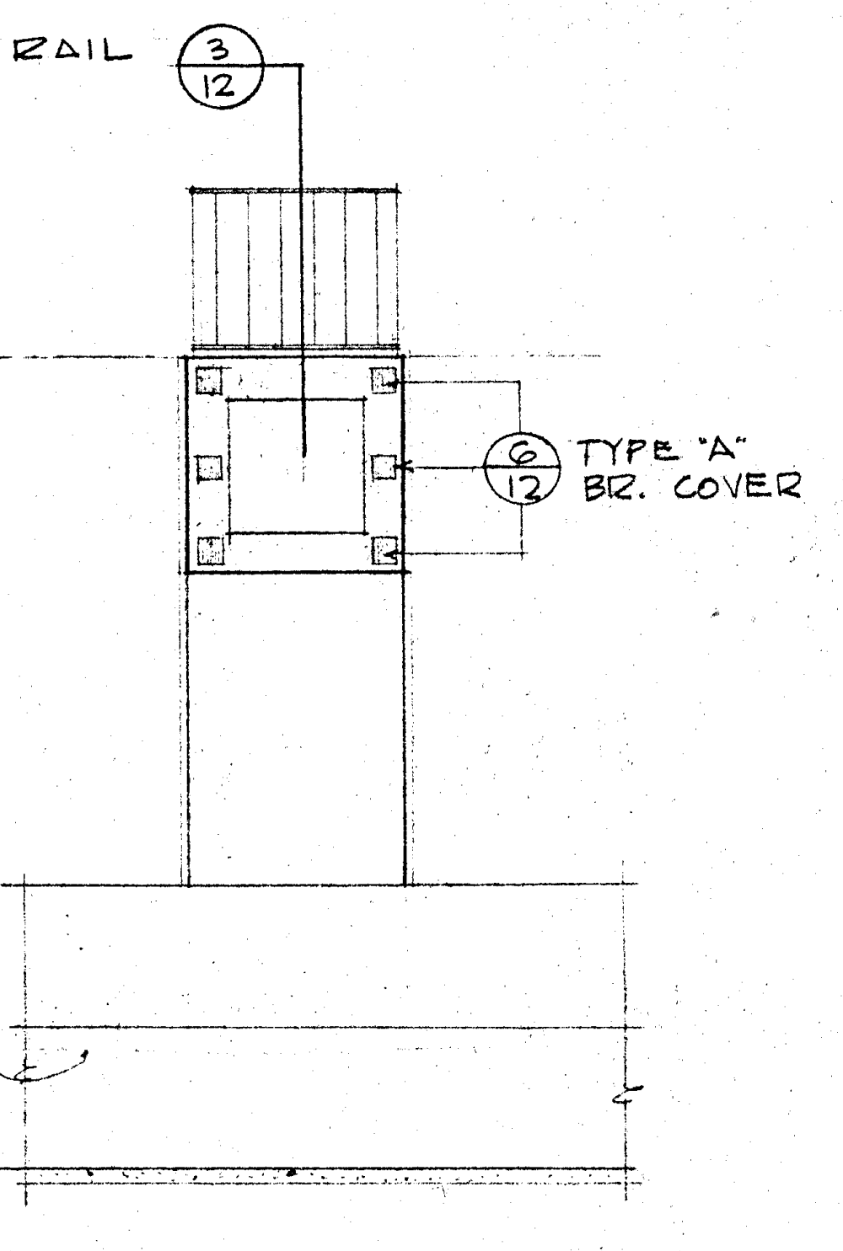
RAIL 3/12
4'-6"
11'-0"
6/12 TYPE "A" BR. COVER

5/12 RAIL 1/4"=1'-0"
END ELEV.

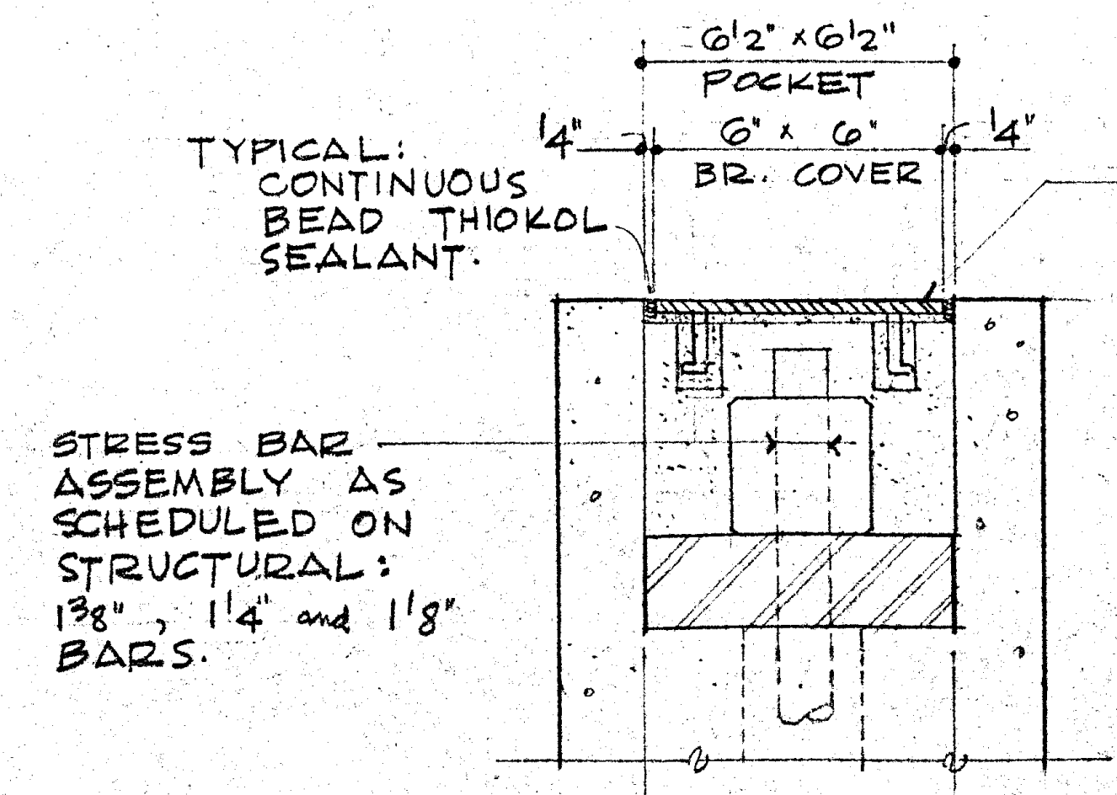
6½" x 6½"
POCKET
¼"
6" x 6"
BR. COVER
¼"
TYPICAL: CONTINUOUS BEAD THIOKOL SEALANT.
STRESS BAR ASSEMBLY AS SCHEDULED ON STRUCTURAL: 1⅜", 1¼" and 1⅛" BARS.

6/12 TYPE "A"
3"=1'-0"

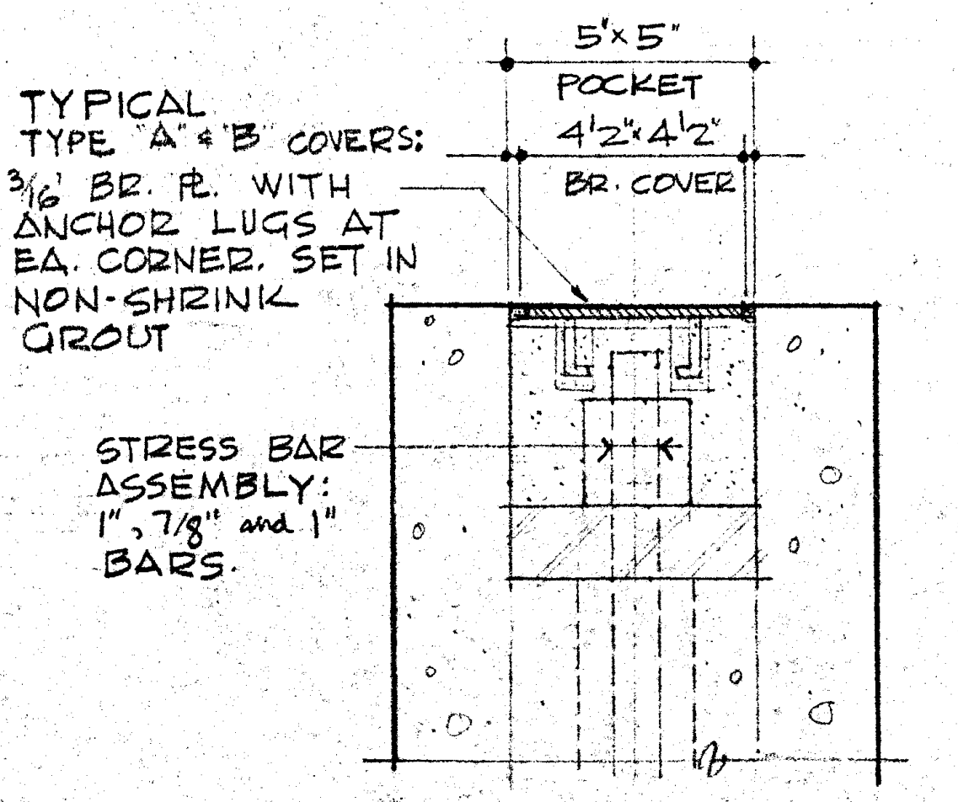
TYPICAL TYPE "A" & "B" COVERS: 3/16" BR. PL. WITH ANCHOR LUGS AT EA. CORNER. SET IN NON-SHRINK GROUT
5"x5"
POCKET
4½"x4½"
BR. COVER
STRESS BAR ASSEMBLY: 1", 7/8" and 1" BARS.

7/12 TYPE "B"
3"=1'-0"

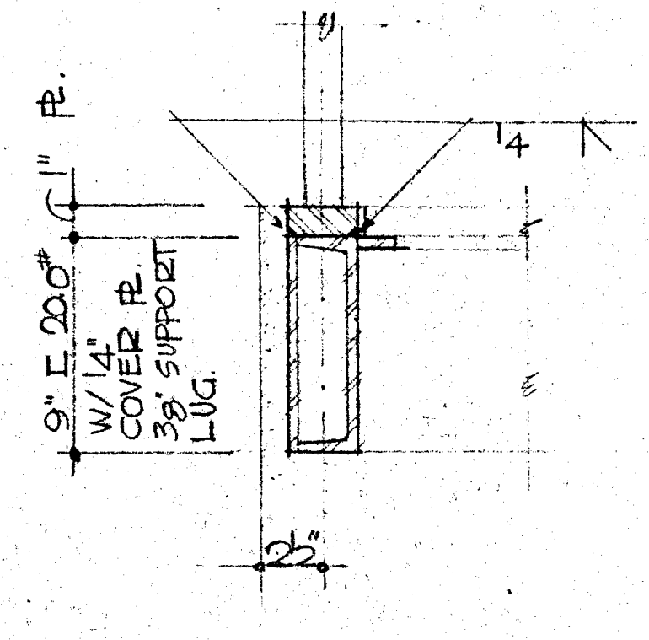
PL.
1"
9" ⊏ 20.0# W/ ¼" COVER PL. ⅜" SUPPORT LUG.
¼
2½"

3·B/12 STRINGER RETURN
1½"=1'-0"

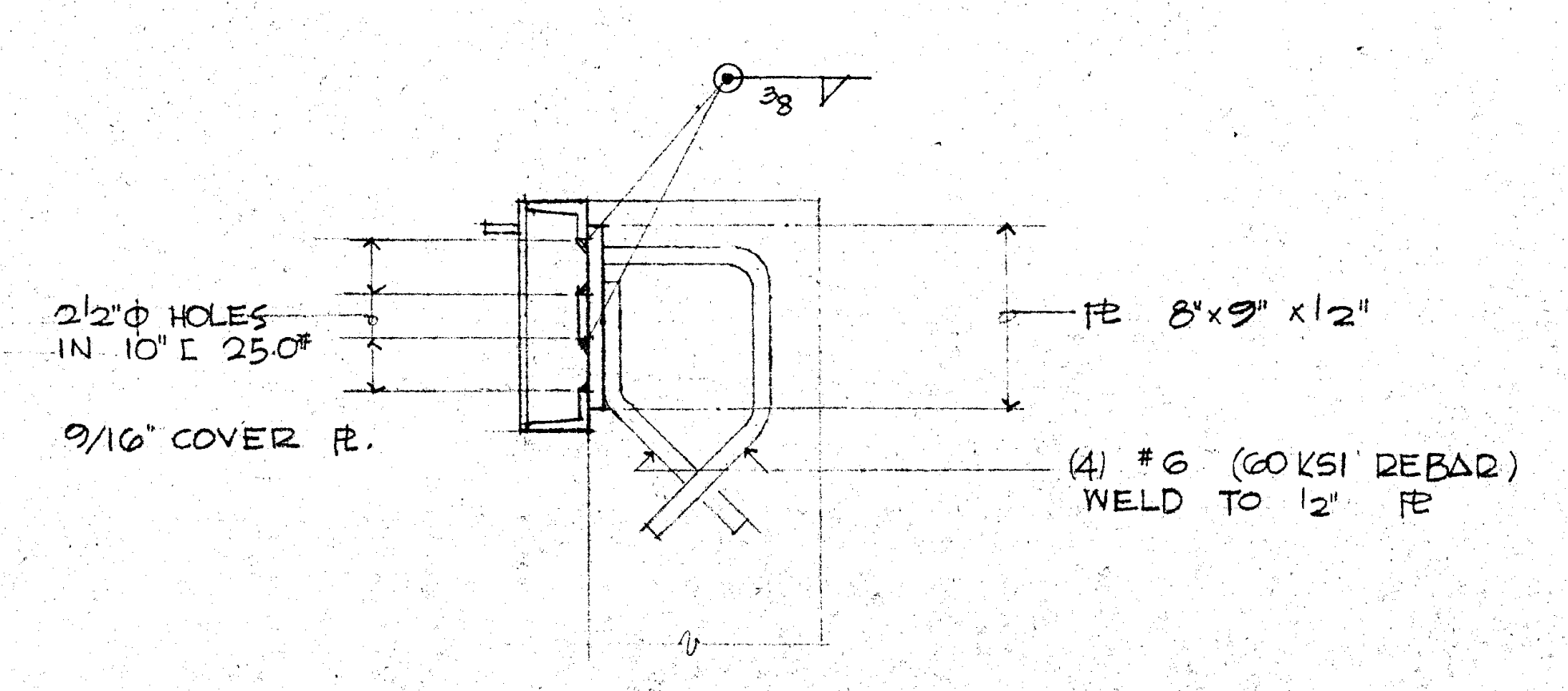
⅜
2½"Φ HOLES IN 10" ⊏ 25.0#
9/16" COVER PL.
PL 8"x9"x½"
(4) #6 (60 KSI REBAR) WELD TO ½" PL

3·A/12 ANCHOR PLATE
UPPER LANDING

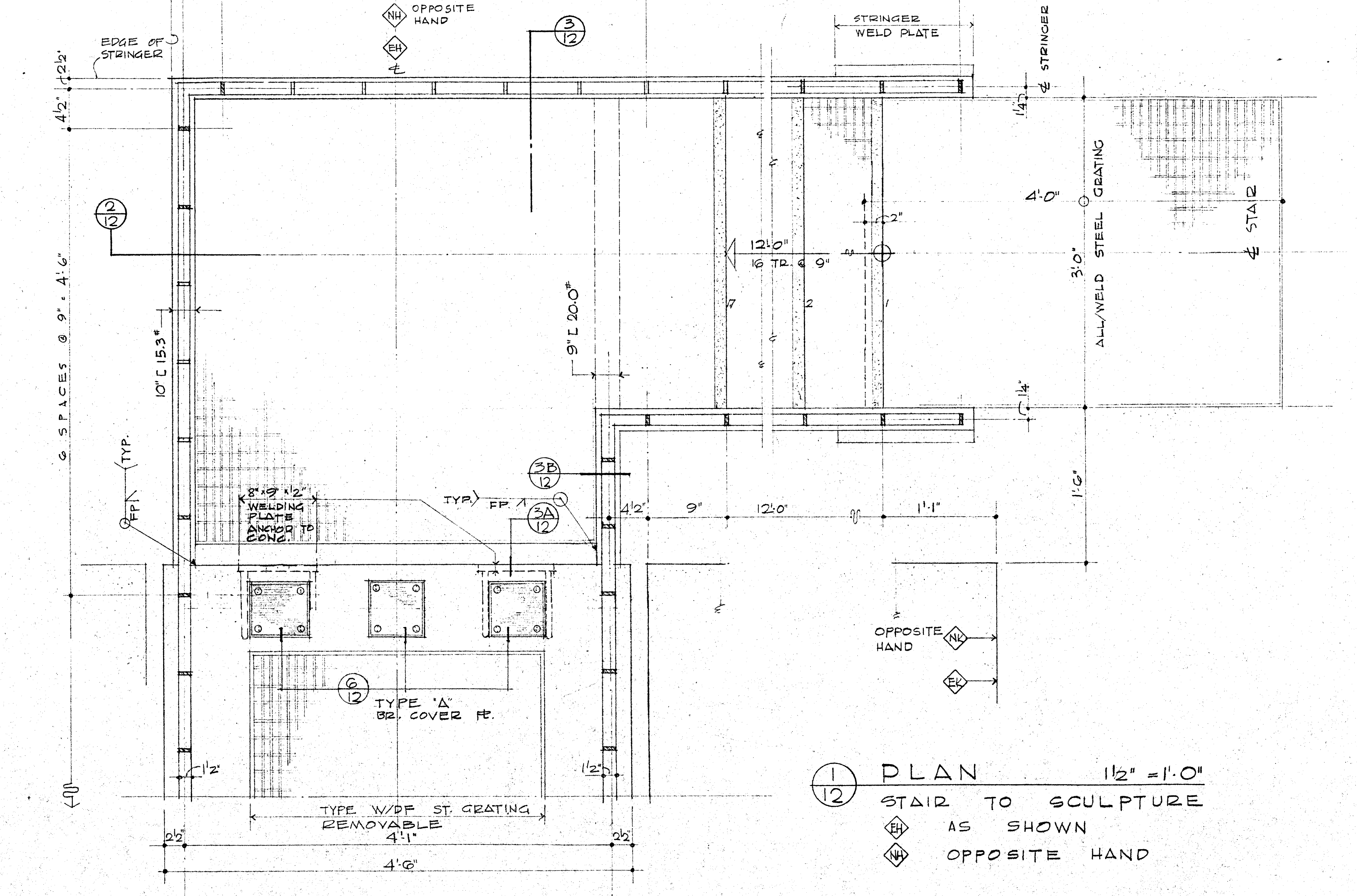
1¼"
4½"
6 EQUAL @ 8½" = 4'-1"
18 SPACES @ 9" = 13'-6"
NH OPPOSITE HAND
EH
℄
3/12
STRINGER WELD PLATE
℄ STRINGER
EDGE OF STRINGER
2½"
4½"
1¼"
2/12
6 SPACES @ 9" = 4'-6"
10" ⊏ 15.3#
9" ⊏ 20.0#
12'-0"
16 TR. @ 9"
2"
4'-0"
3'-0"
ALL/WELD STEEL GRATING
℄ STAIR
1¼"
1'-6"
(TYP.
FP
3B/12
TYP. FP
3A/12
8"x9"x½" WELDING PLATE ANCHOR TO CONC.
4½"
9"
12'-0"
1'-1"
OPPOSITE HAND NH
EH
6/12 TYPE "A" BR. COVER PL.
1½"
1½"
TYPE W/DF ST. GRATING REMOVABLE
2½"
4'-1"
2½"
4'-6"

1/12 PLAN 1½" =1'-0"
STAIR TO SCULPTURE
EH AS SHOWN
NH OPPOSITE HAND

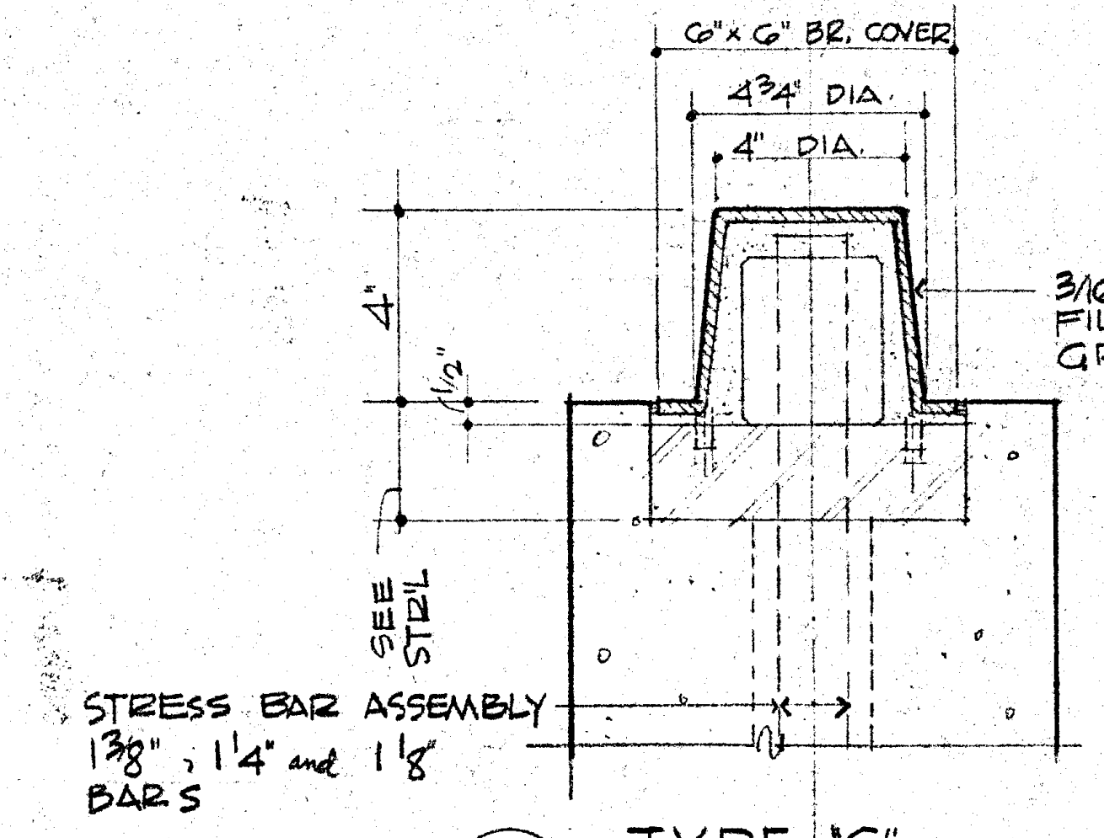
6"x6" BR. COVER
4¾" DIA.
4" DIA.
3/16" BRONZE CUPS FILL W/NON STAIN GROUT
4"
½"
SEE STR'L
STRESS BAR ASSEMBLY 1⅜", 1¼" and 1⅛" BARS

8/12 TYPE "C"
3"=1'-0"

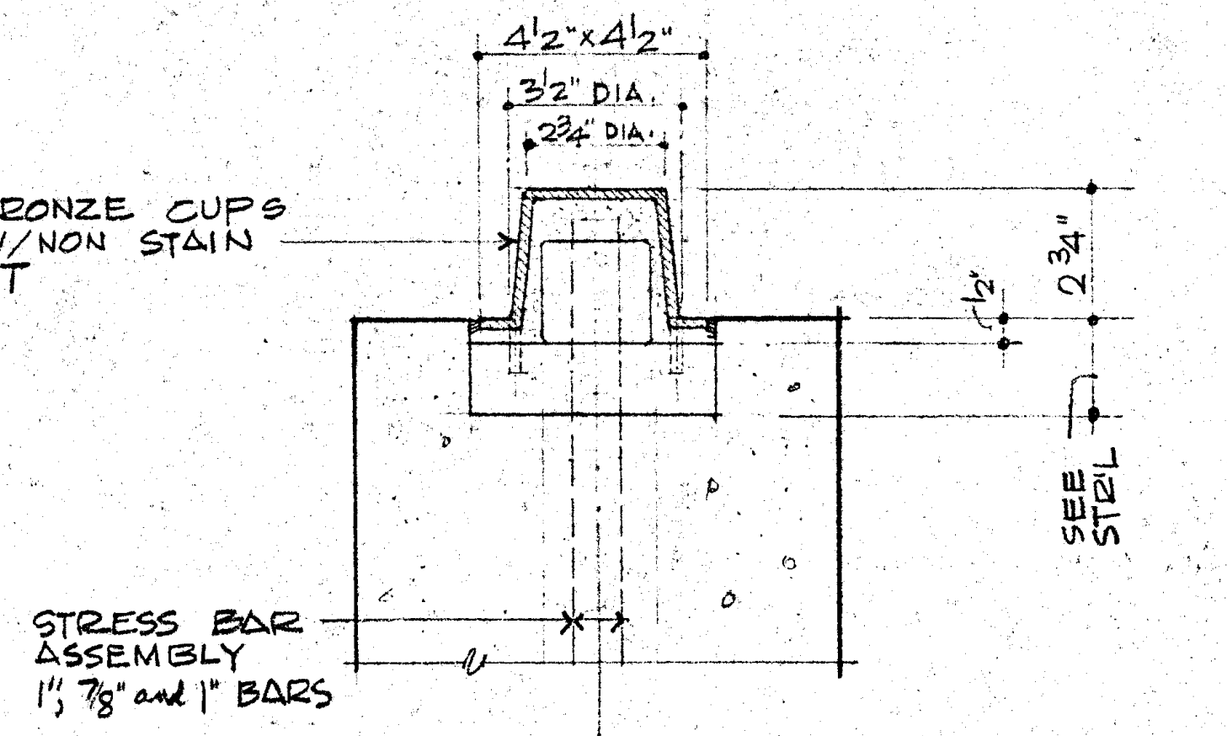
4½"x4½"
3½" DIA.
2¾" DIA.
½"
2¾"
SEE STR'L
STRESS BAR ASSEMBLY 1", 7/8" and 1" BARS

9/12 TYPE "D"
3"=1'-0"

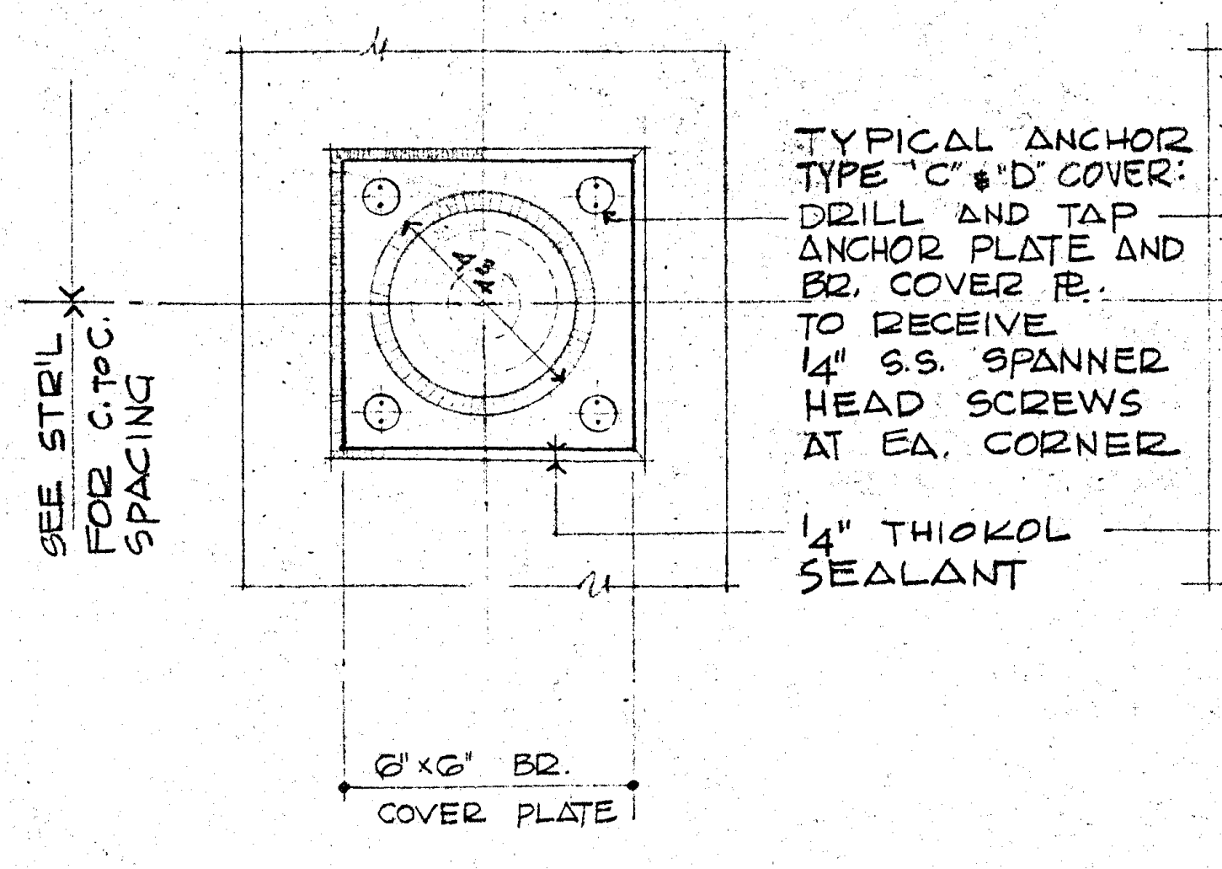
SEE STR'L FOR C. TO C. SPACING
4⅜
TYPICAL ANCHOR TYPE "C" & "D" COVER: DRILL AND TAP ANCHOR PLATE AND BR. COVER PL. TO RECEIVE ¼" S.S. SPANNER HEAD SCREWS AT EA. CORNER
¼" THIOKOL SEALANT
6"x6" BR. COVER PLATE

10/12 PLAN 3"=1'-0"
TYPE "C" COVER

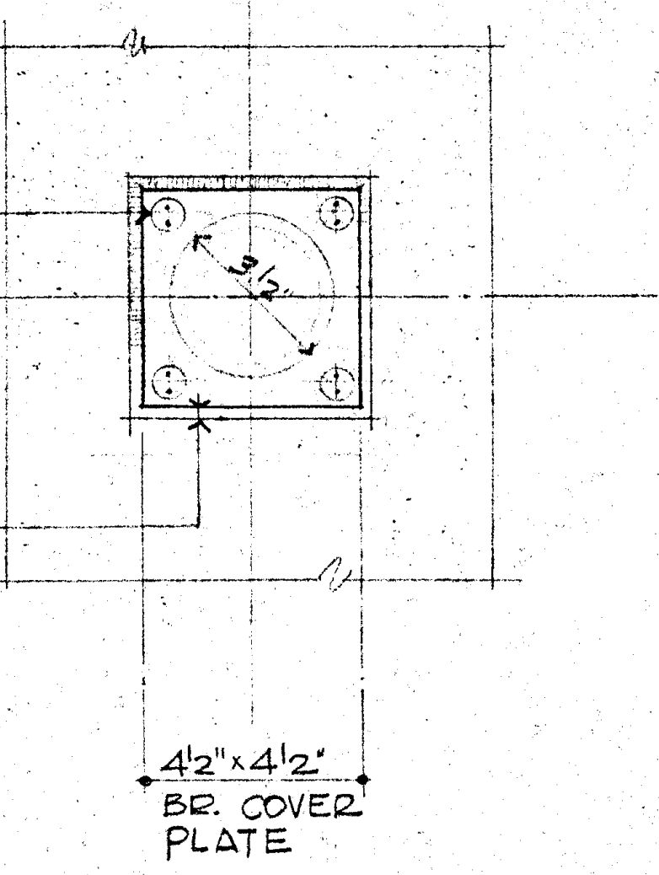
3½
4½"x4½" BR. COVER PLATE

11/12 PLAN 3"=1'-0"
TYPE "D" COVER

FLAT COVERS · TYPE "A" and "B"
OVER RECESSED STRESS ASSEMBLIES
ON TOP OF VERTICAL ELEMENTS AND
TERMINAL ELEMENTS SPOUTING WATER

CUP COVERS · TYPE "C" and "D"
OVER RAISED STRESS ASSEMBLIES
ON SIDES OF ELEMENTS.

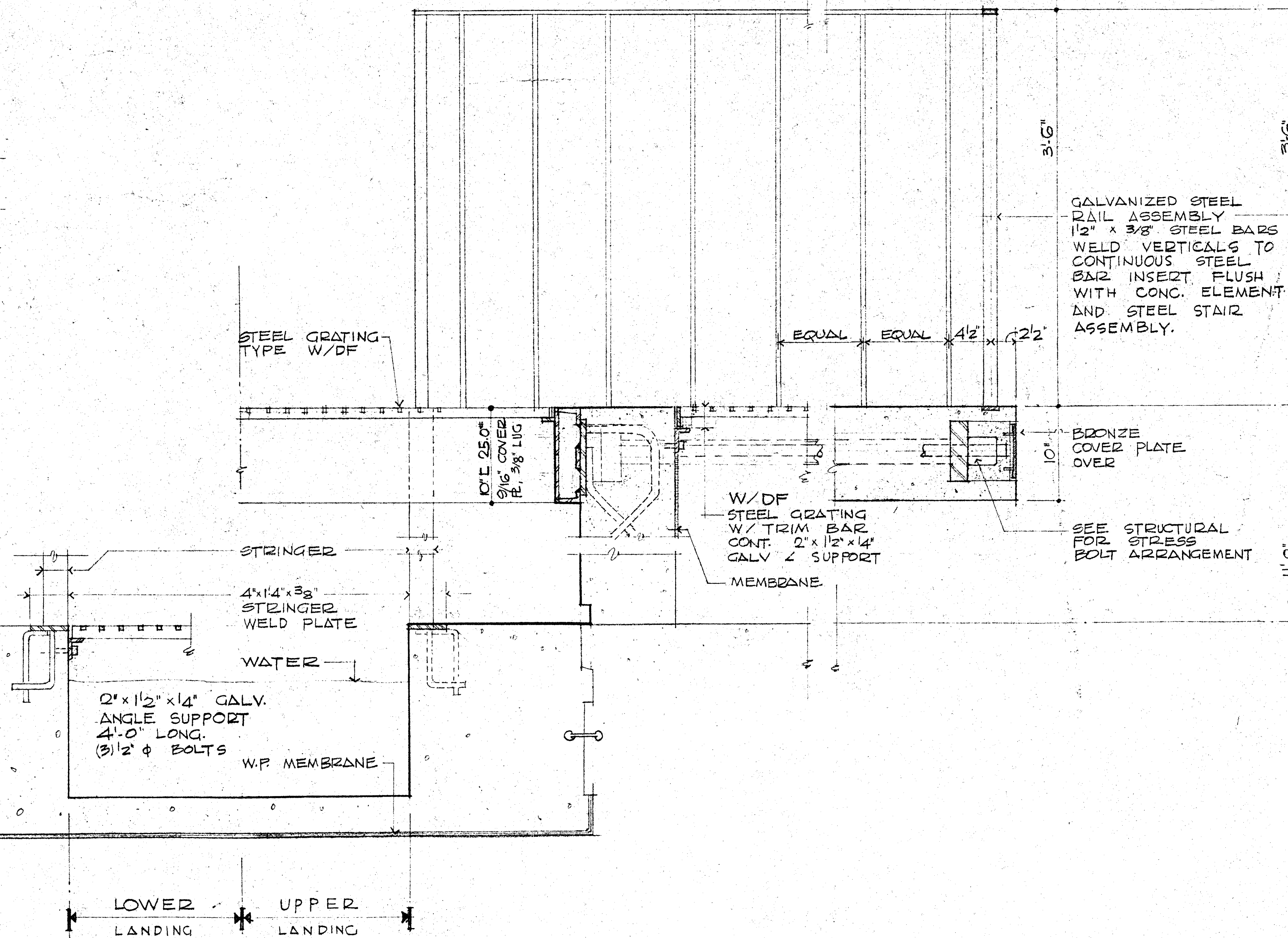
3'-6"
3'-6"
GALVANIZED STEEL RAIL ASSEMBLY 1½" x 3/8" STEEL BARS WELD VERTICALS TO CONTINUOUS STEEL BAR INSERT FLUSH WITH CONC. ELEMENT AND STEEL STAIR ASSEMBLY.
STEEL GRATING TYPE W/DF
EQUAL
EQUAL
4½"
2½"
10" ⊏ 25.0# 9/16" COVER PL., 3/8" LUG
BRONZE COVER PLATE OVER
10"
W/DF STEEL GRATING W/ TRIM BAR CONT. 2" x 1½" x ¼" GALV ∠ SUPPORT
SEE STRUCTURAL FOR STRESS BOLT ARRANGEMENT
MEMBRANE
STRINGER
4"x1'-4"x⅜" STRINGER WELD PLATE
WATER
2" x 1½" x ¼" GALV. ANGLE SUPPORT 4'-0" LONG. (3) ½" Φ BOLTS
W.P. MEMBRANE
LOWER LANDING
UPPER LANDING

3/12 STAIR RAIL AND LANDING DETAILS
UPPER AND LOWER 1½" = 1'-0"

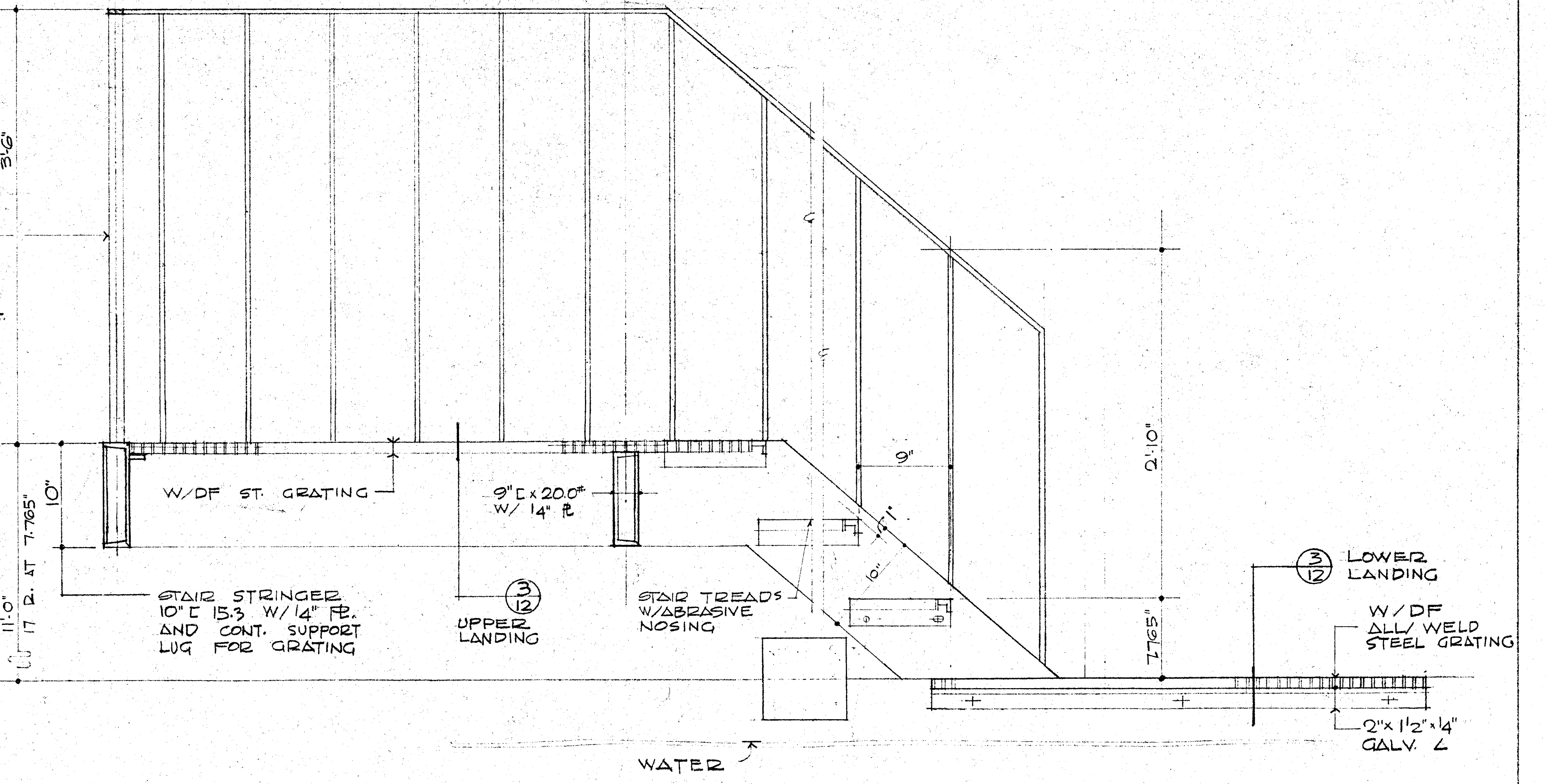
3'-6"
2'-10"
9"
1"
10"
10"
11'-0"
17 R. AT 7.765"
7.765"
W/DF ST. GRATING
9" ⊏ x 20.0# W/ ¼" PL
STAIR STRINGER 10" ⊏ 15.3 W/ ¼" PL. AND CONT. SUPPORT LUG FOR GRATING
3/12 UPPER LANDING
STAIR TREADS W/ABRASIVE NOSING
3/12 LOWER LANDING
W/DF ALL/ WELD STEEL GRATING
2"x 1½"x ¼" GALV. ∠
WATER

2/12 STAIR SECTION
1½"= 1'-0"

EMBARCADERO PLAZA
EMBARCADERO LOWER MARKET APPROVED REDEVELOPMENT PROJECT AREA E1

SCALE:	AS NOTED
DATE:	JAN. 25, 1969
DRAWN BY:	W.H. J.V.

MISCELLANEOUS DETAILS

SAN FRANCISCO REDEVELOPMENT AGENCY IN COOPERATION
WITH THE SAN FRANCISCO RECREATION AND PARK DEPARTMENT
AND SAN FRANCISCO DEPARTMENT OF PUBLIC WORKS

JOINT VENTURE ARCHITECTS:
LAWRENCE HALPRIN & ASSOCIATES Lawrence Halprin
JOHN S. BOLLES ASSOCIATES
MARIO J. CIAMPI & ASSOCIATES Mario J. Ciampi

12

SHEET 12 OF 12

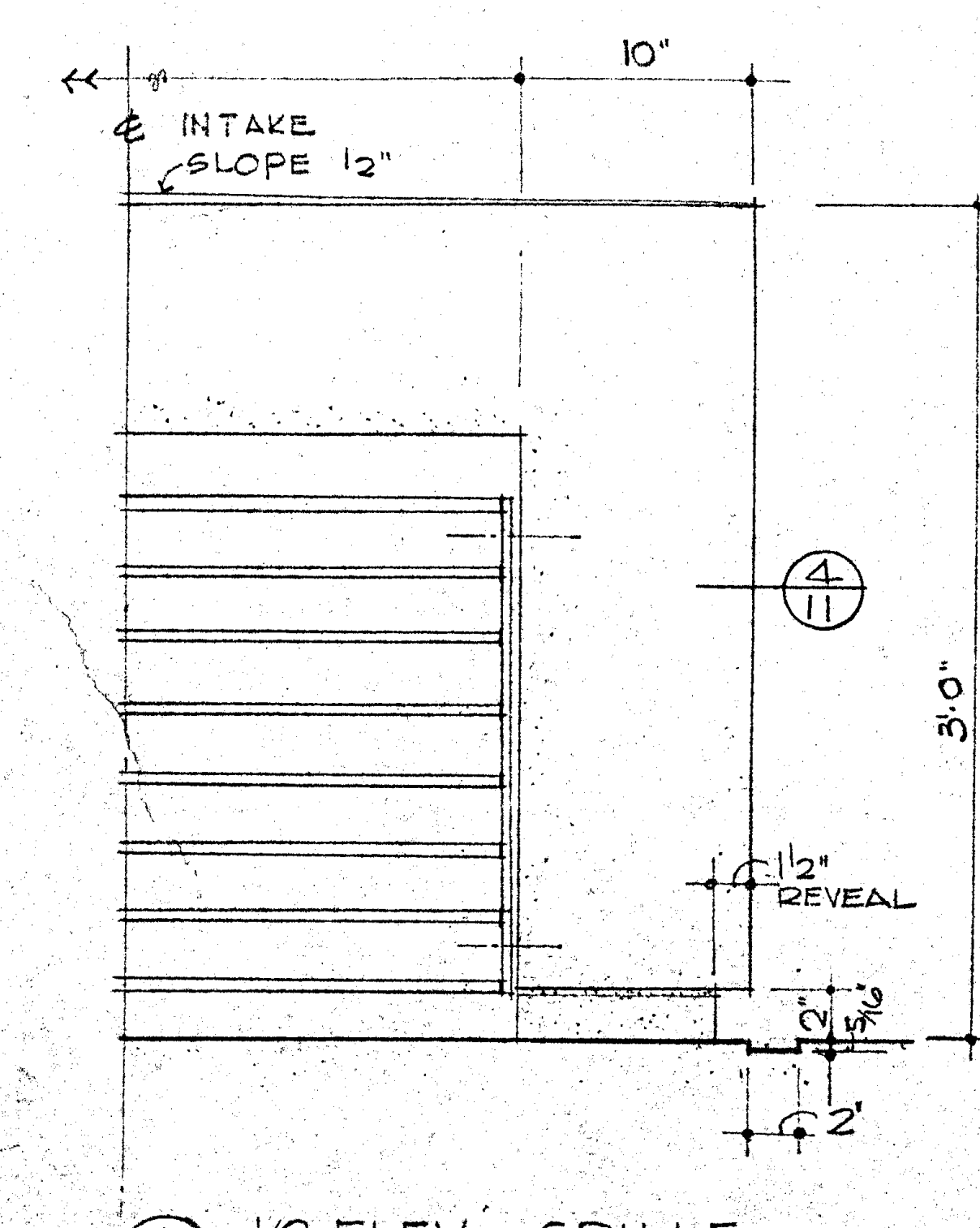
10"
℄ INTAKE
SLOPE ½"
4/11
3'-0"
½" REVEAL
2'

① 1/2 ELEV. - GRILLE 1½"=1'0"

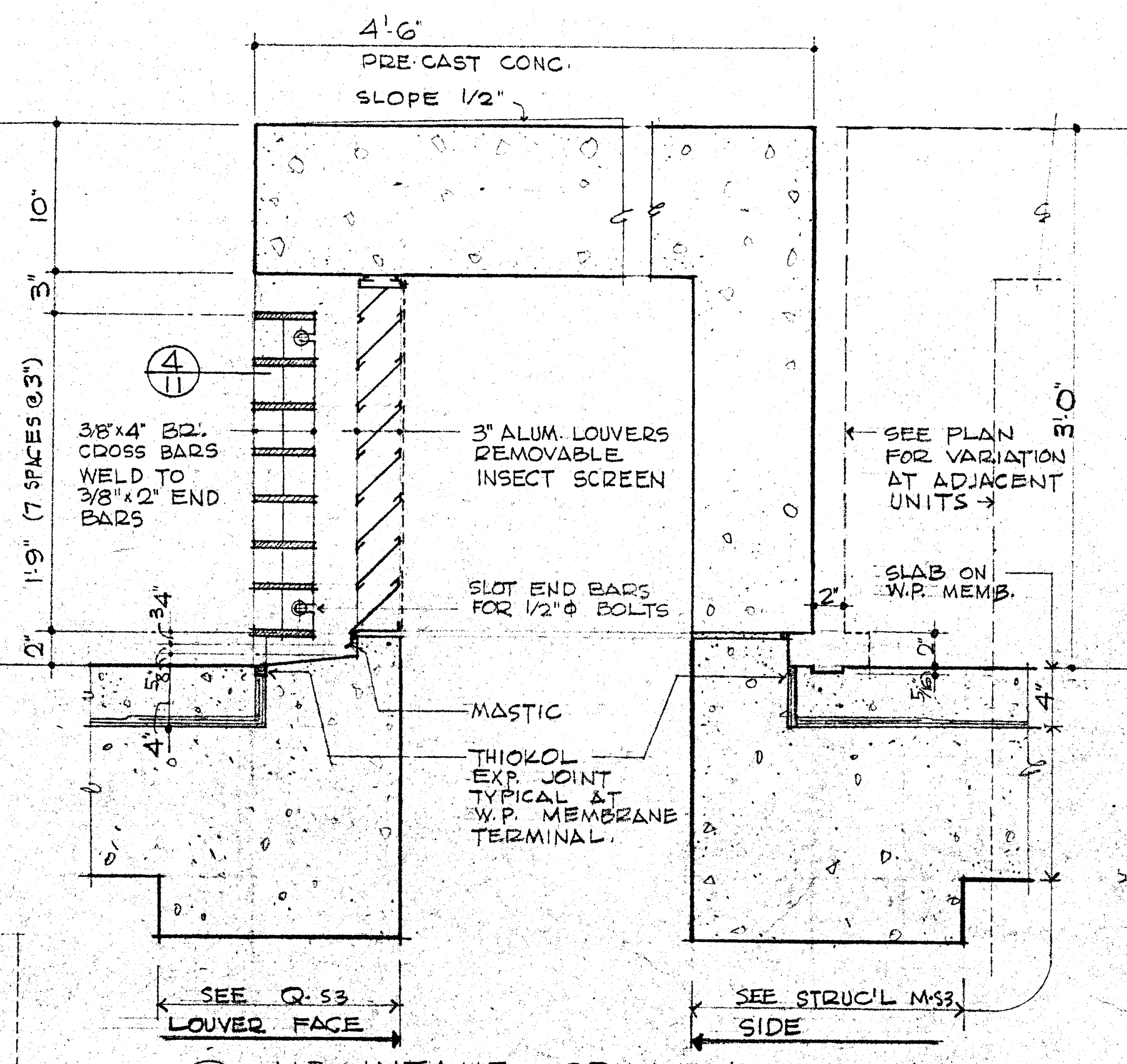
4'-6"
PRE-CAST CONC.
SLOPE ½"
10"
3'
3'-0"
1'-9" (7 SPACES @ 3")
4/11
3/8"×4" BR. CROSS BARS WELD TO 3/8"×2" END BARS
3" ALUM. LOUVERS REMOVABLE INSECT SCREEN
SEE PLAN FOR VARIATION AT ADJACENT UNITS
SLAB ON W.P. MEMB.
SLOT END BARS FOR ½"Ø BOLTS
MASTIC
THIOKOL EXP. JOINT TYPICAL AT W.P. MEMBRANE TERMINAL
SEE Q-53
LOUVER FACE
SEE STRUC'L M-53
SIDE

② AIR INTAKE · GRILLE/LOUVER 1½"=1'0"
SEE SH. 9 FOR BALANCE OF DETAIL

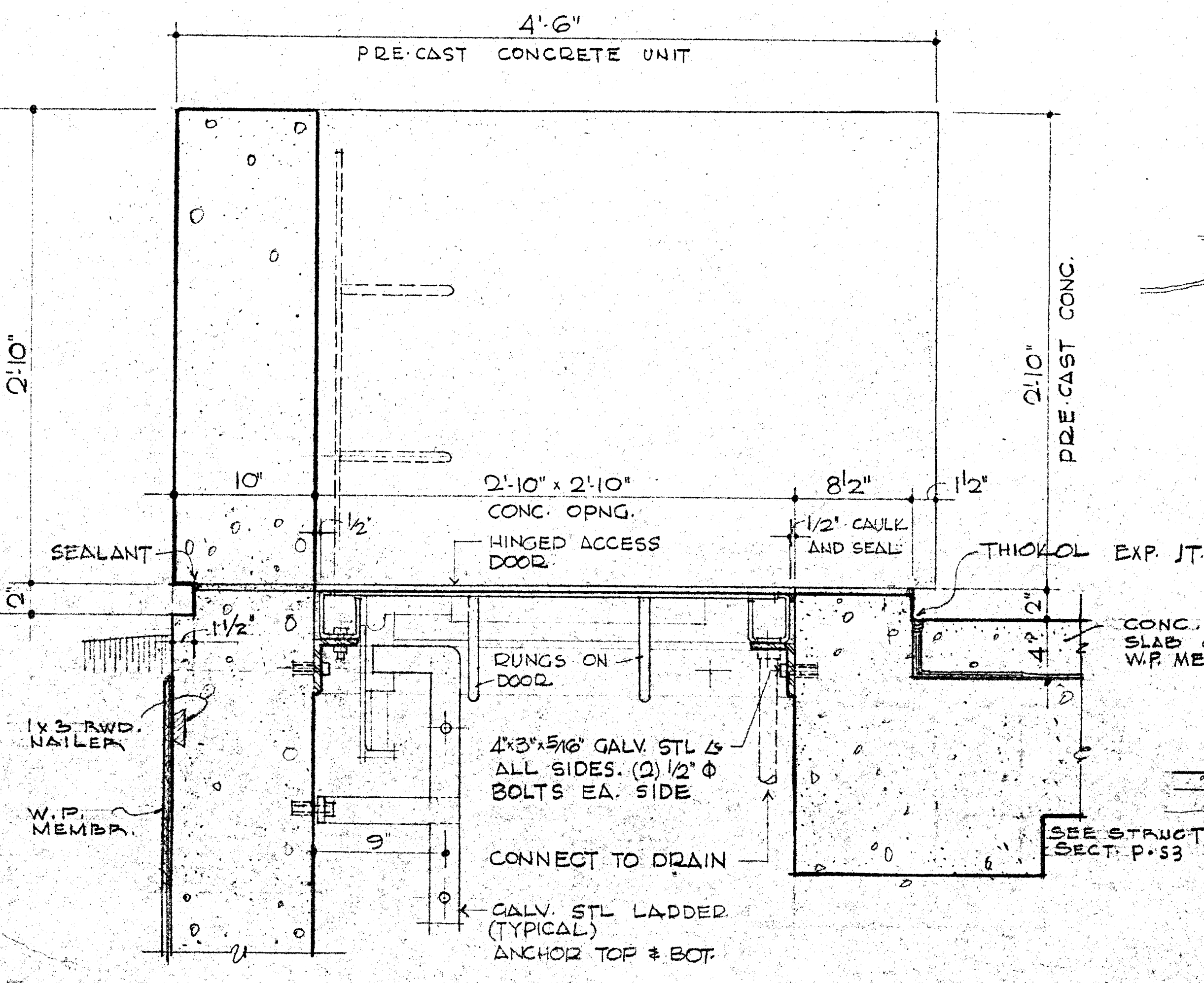
4'-6"
PRE-CAST CONCRETE UNIT
2'-10"
2'-10"
PRE-CAST CONC.
10"
2'-10" × 2'-10" CONC. OPNG.
8½"
1½"
SEALANT
HINGED ACCESS DOOR
½" CAULK AND SEAL
THIOKOL EXP. JT.
CONC. SLAB ON W.P. MEMB.
1×3 RWD. NAILER
W.P. MEMB.
RUNGS ON DOOR
4"×3"×5/16" GALV. STL ∠ ALL SIDES. (2) ½"Ø BOLTS EA. SIDE
CONNECT TO DRAIN
GALV. STL LADDER (TYPICAL) ANCHOR TOP & BOT.
9"
SEE STRUCT SECT. P-53

③ ACCESS · MECH. VAULT 1½"=1'0"
SEE SH. 9 FOR BALANCE OF DETAIL

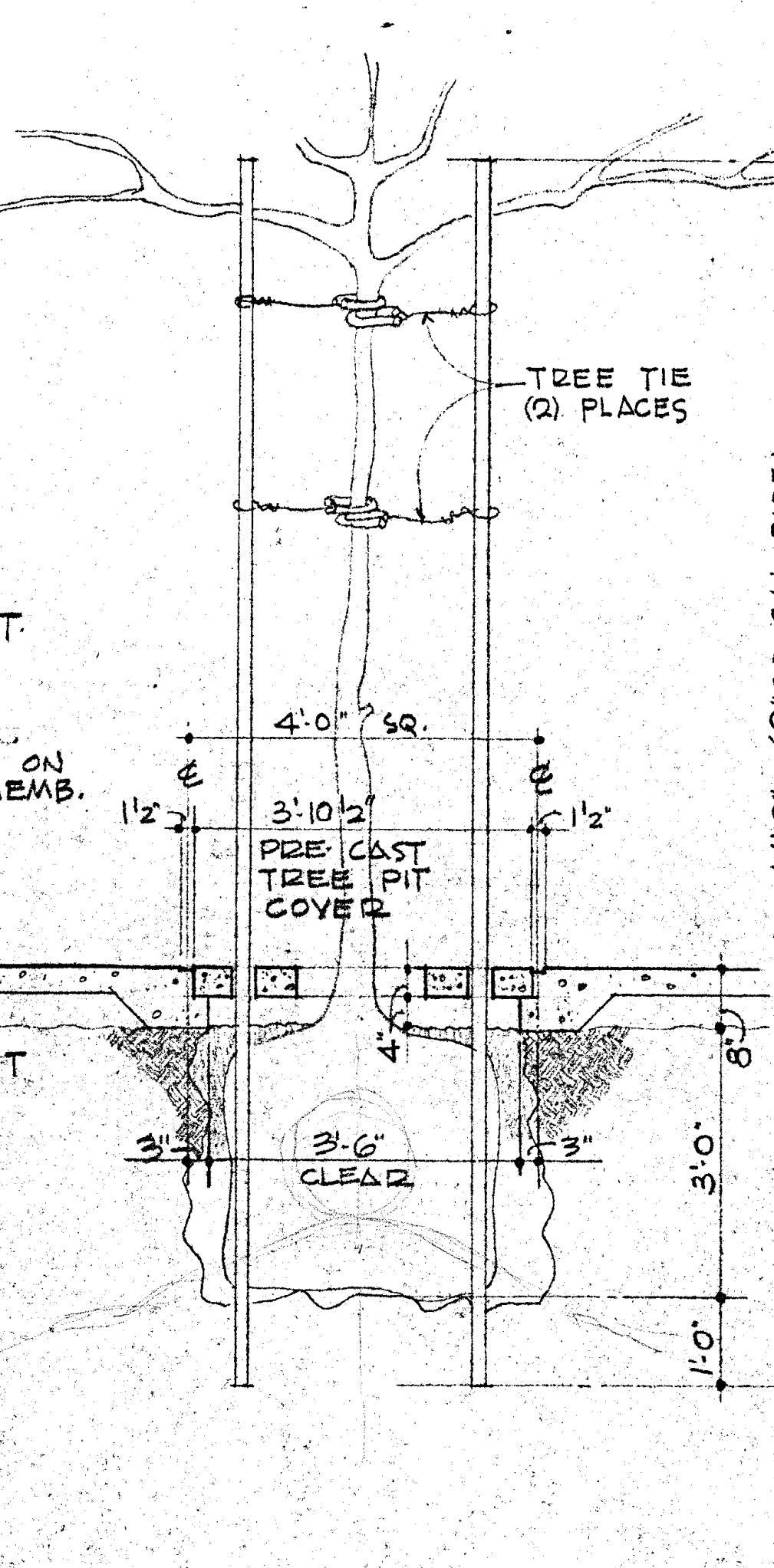
TREE TIE (2) PLACES
4'-0" SQ.
3'-10½" PRE-CAST TREE PIT COVER
1½"
3'-6" CLEAR
3"
3'-0"
1'-0"
8"

⑬ SECTION · TREE PIT 1½"=1'0"

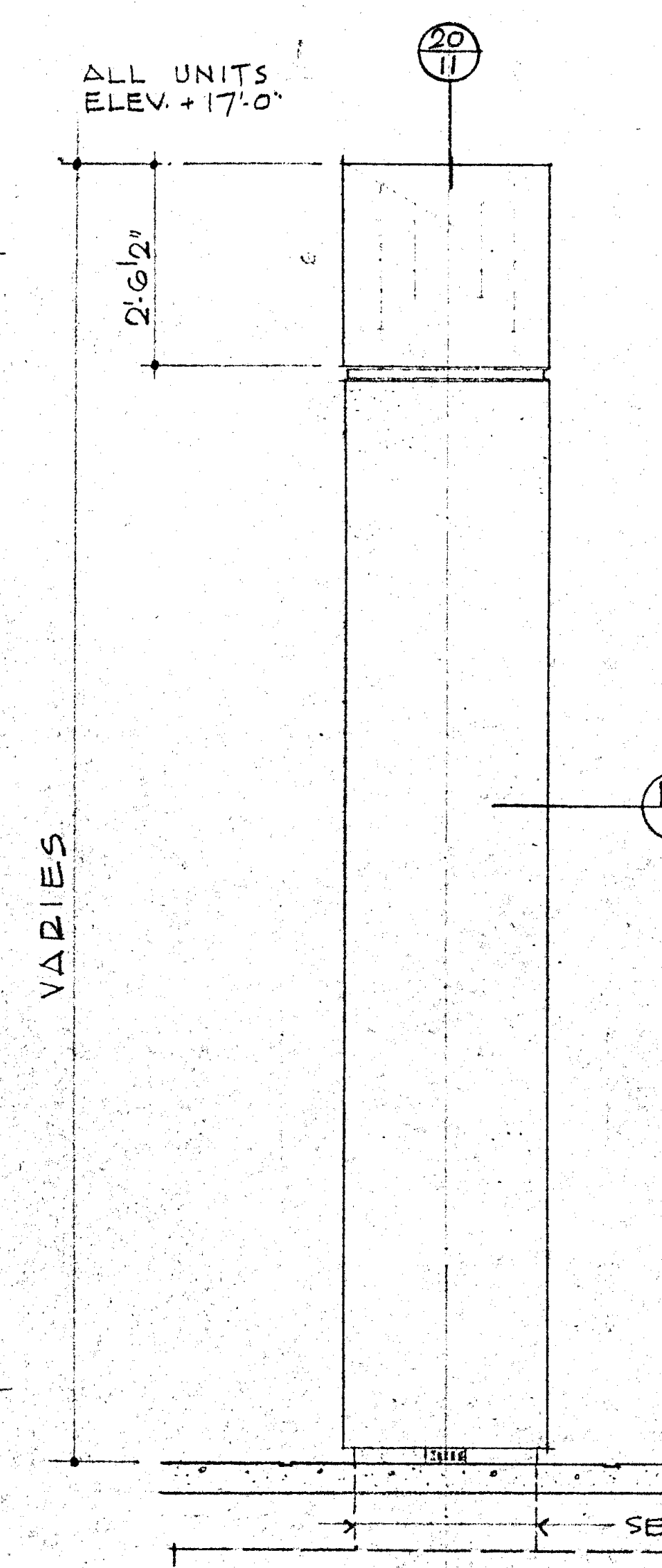
ALL UNITS ELEV. +17'-0"
20/11
2'-6½"
14'-0" (2"O.D. GAL. PIPE)
VARIES
19/11
SEE STRUCTURAL

⑱ PYLON · ELEV. ½"=1'0"

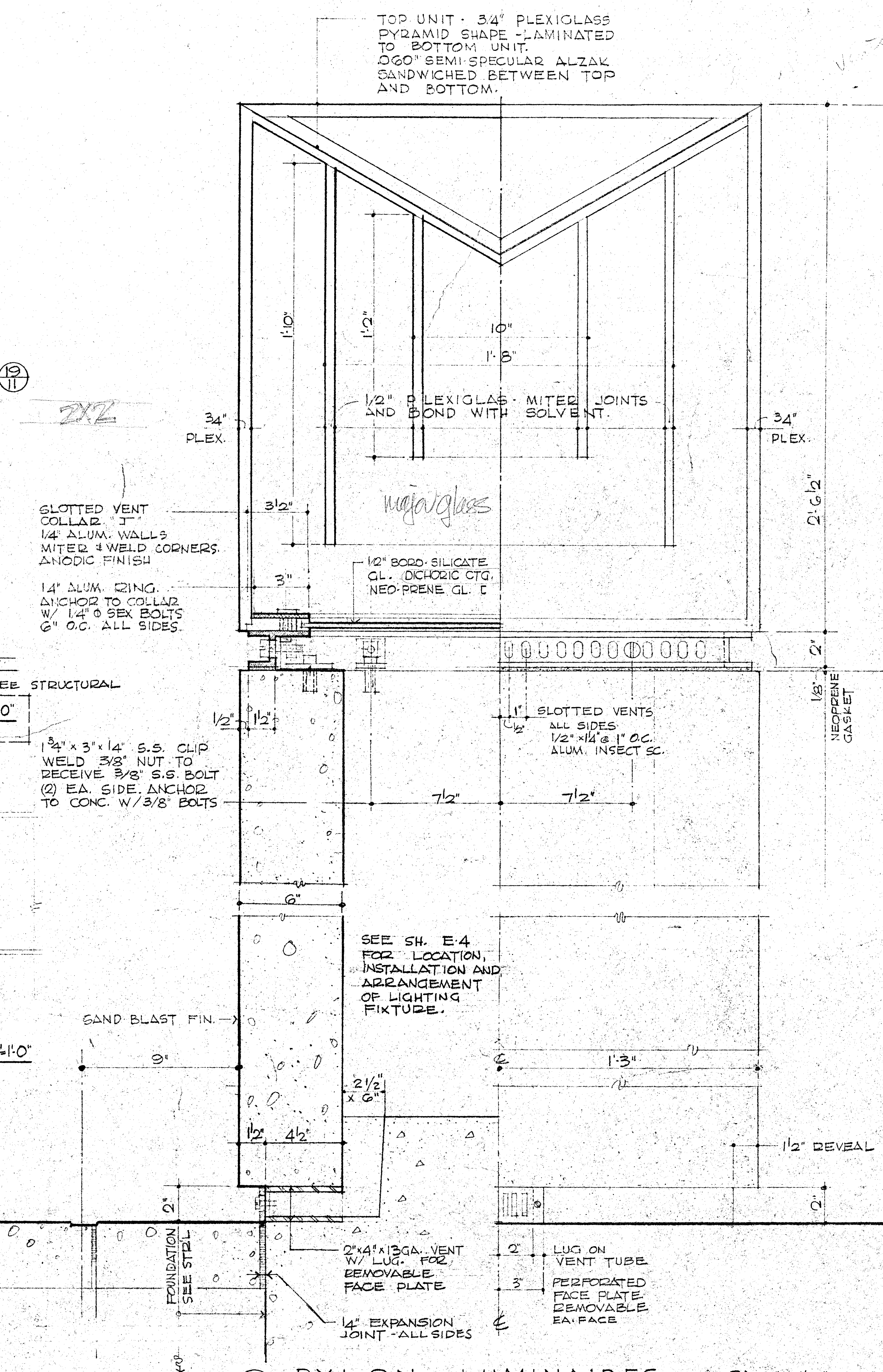
TOP UNIT - ¾" PLEXIGLASS PYRAMID SHAPE - LAMINATED TO BOTTOM UNIT. .060" SEMI-SPECULAR ALZAK SANDWICHED BETWEEN TOP AND BOTTOM.
1'-0"
1'-2"
10"
1'-8"
½" PLEXIGLAS - MITER JOINTS AND BOND WITH SOLVENT
¾" PLEX.
¾" PLEX.
2'-6½"
2X2
SLOTTED VENT COLLAR "J" ¼" ALUM. WALLS MITER & WELD CORNERS. ANODIC FINISH
3½"
3"
12" BORO-SILICATE GL. DICHORIC CTG. NEO-PRENE GL. ⊏
1¼" ALUM. RING. ANCHOR TO COLLAR W/ 1/4"Ø SEX BOLTS 6" O.C. ALL SIDES.
1¾" × 3" × ¼" S.S. CLIP WELD 3/8" NUT TO RECEIVE 3/8" S.S. BOLT (2) EA. SIDE. ANCHOR TO CONC. W/3/8" BOLTS
½"
SLOTTED VENTS ALL SIDES ½" × ¼" @ 1" O.C. ALUM. INSECT SC.
NEOPRENE GASKET
7½"
7½"
6"
SEE SH. E-4 FOR LOCATION, INSTALLATION AND ARRANGEMENT OF LIGHTING FIXTURE.
SAND BLAST FIN.
9"
1'-3"
2½" × 6"
4½"
½" REVEAL
2'
FOUNDATION SEE STR'L.
2"×4"×13GA. VENT W/ LUG. FOR REMOVABLE FACE PLATE
¼" EXPANSION JOINT - ALL SIDES
LUG ON VENT TUBE
PERFORATED FACE PLATE REMOVABLE EA. FACE

⑳ PYLON · LUMINAIRES 3'-0"=1'0"

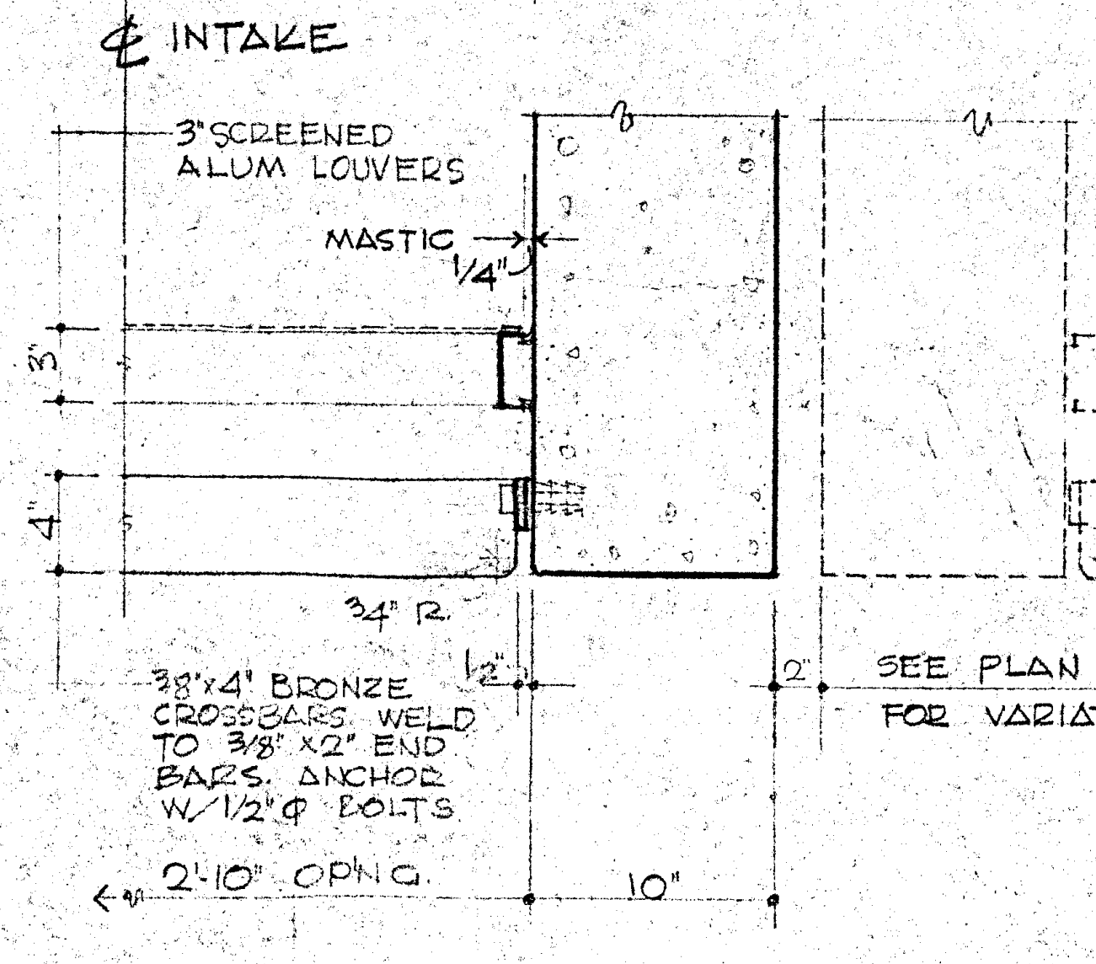
℄ INTAKE
3" SCREENED ALUM. LOUVERS
MASTIC
¼"
¾" R.
3/8"×4" BRONZE CROSSBARS. WELD TO 3/8"×2" END BARS. ANCHOR W/½"Ø BOLTS
2'-10" OPNG.
10"

SEE PLAN SH. 7 FOR VARIATIONS

④ JAMB · GRILLE 1½"=1'0"

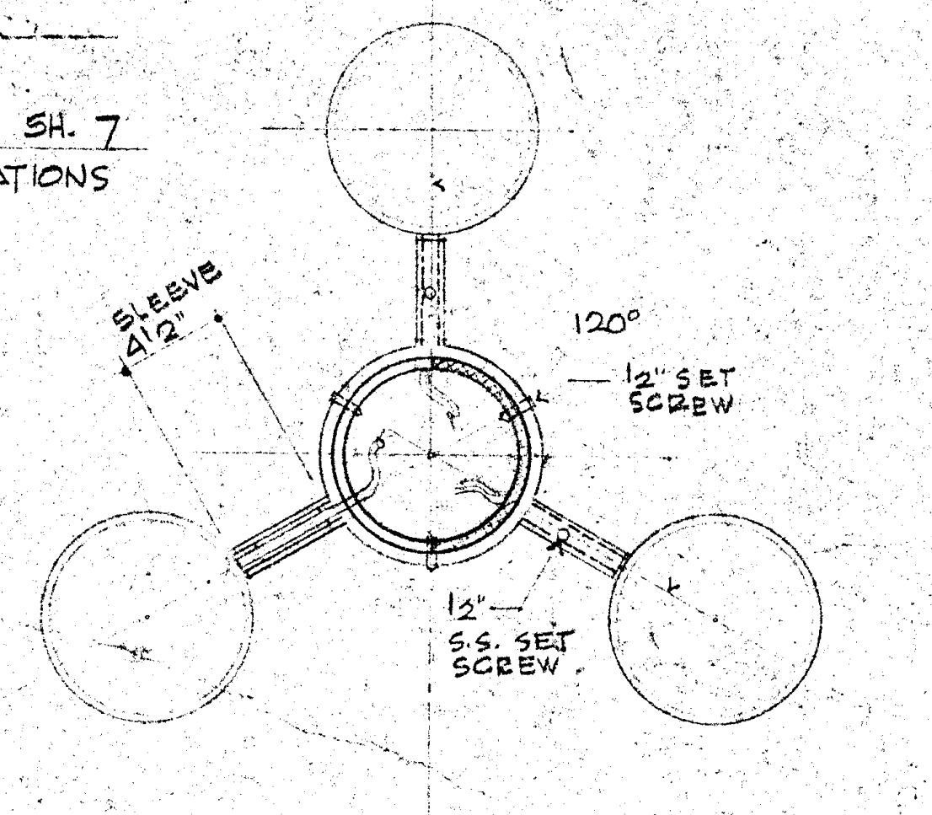
SLEEVE 4½"
120°
½" S.S. SET SCREW

⑥ LIGHT UNIT 1½"=1'0"
PLAN · SECTION

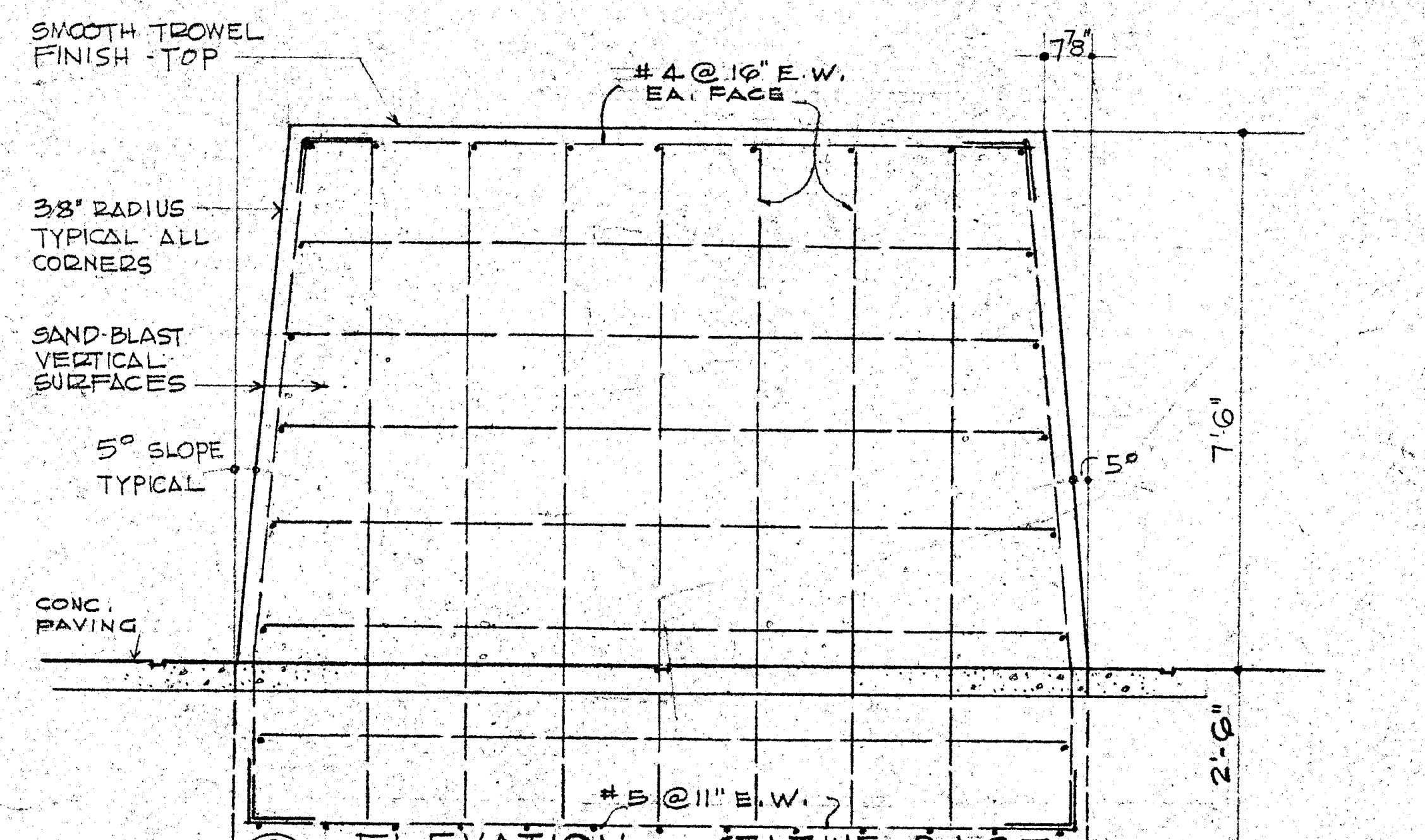
SMOOTH TROWEL FINISH - TOP
#4 @ 16" E.W. EA. FACE
1'-7½"
3/8" RADIUS TYPICAL ALL CORNERS
SAND-BLAST VERTICAL SURFACES
5° SLOPE TYPICAL
5°
7'-6"
CONC. PAVING
2'-6"
#5 @ 11" E.W.
BOT. OF FTG.

⑧ ELEVATION · STATUE BASE 1/2"=1'-0"

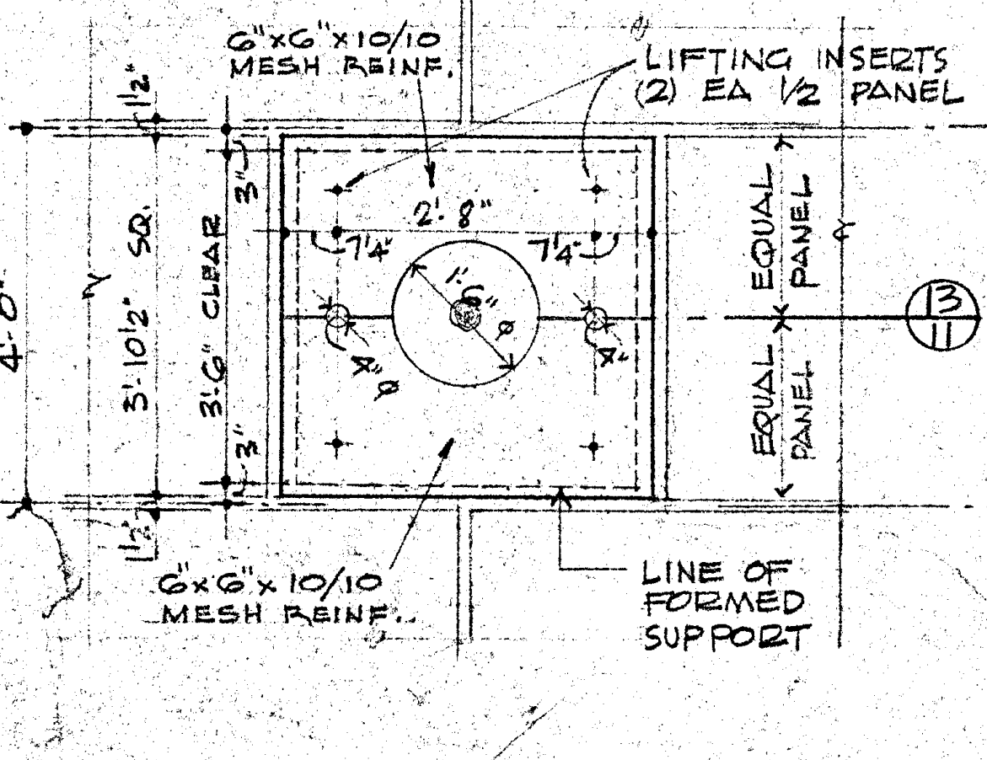
6"×6"×10/10 MESH REINF.
LIFTING INSERTS (2) EA. ½ PANEL
4'-0"
3'-10½" SQ.
2'-8"
EQUAL PANEL
EQUAL PANEL
13/11
6×6×10/10 MESH REINF.
LINE OF FORMED SUPPORT

⑭ PLAN · TREE PIT 1½"=1'0"
PRECAST CONC. COVER

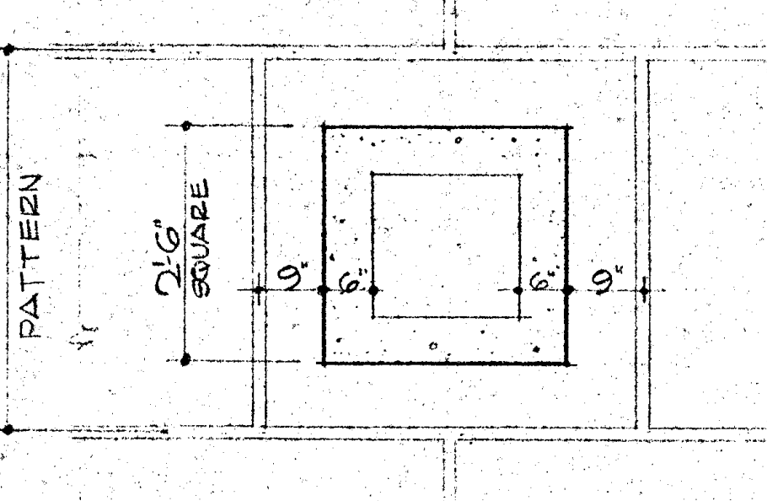
PAVING PATTERN
9"
9"

⑲ PYLON · PLAN ½"=1'0"

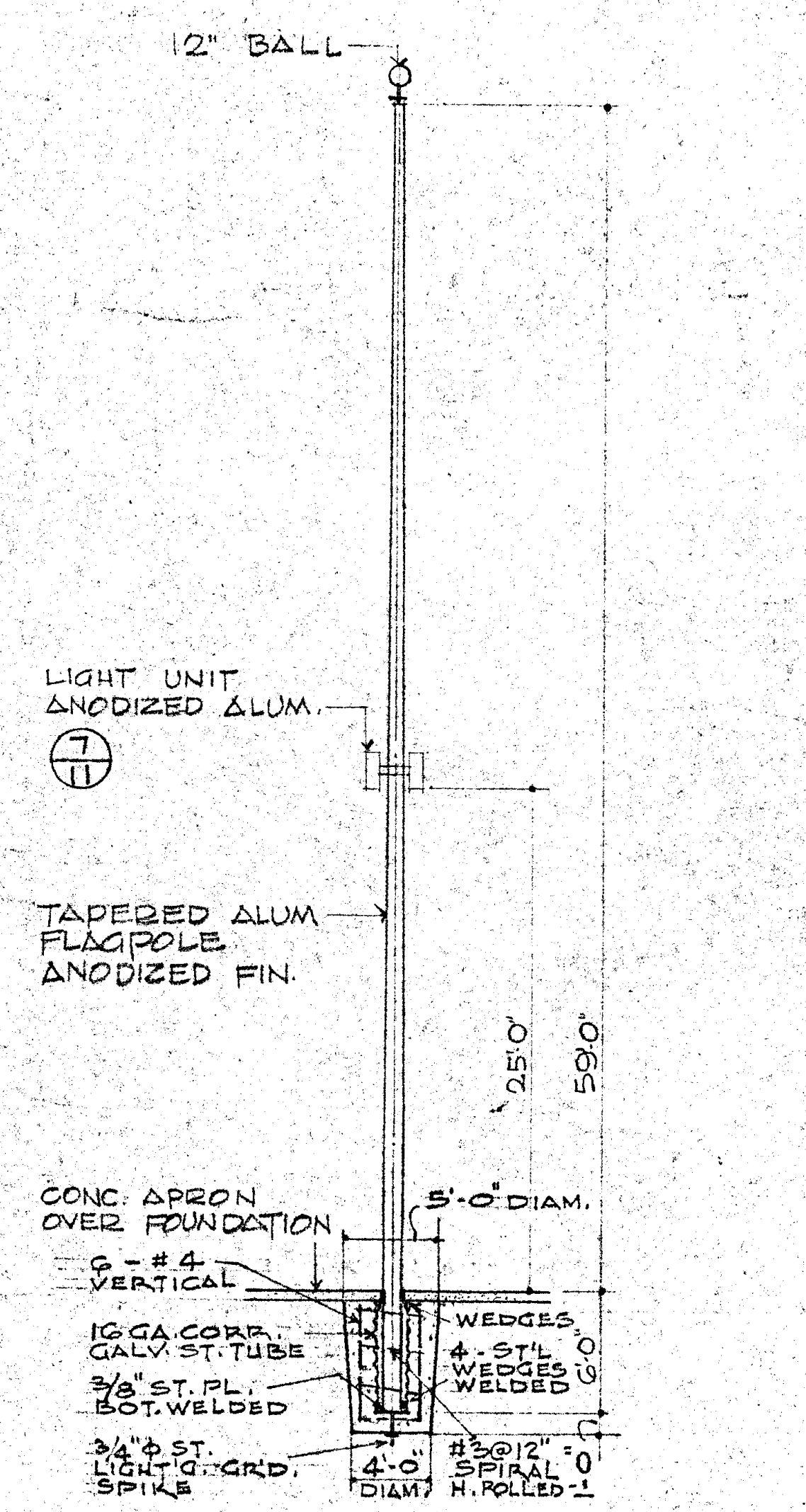
12" BALL
LIGHT UNIT ANODIZED ALUM.
7/11
TAPERED ALUM. FLAGPOLE ANODIZED FIN.
25'-0"
29'-0"
CONC. APRON OVER FOUNDATION
5'-0" DIAM.
6-#4 VERTICAL
16 GA. CORR. GALV. ST. TUBE
3/8" ST. PL. BOT. WELDED
3/4" Ø ST. LIGHT'G. GRD. SPIKE
WEDGES
4-STL WEDGES WELDED
4'-0"

⑤ LIGHT · BANNER POLE 1/8"=1'-0"

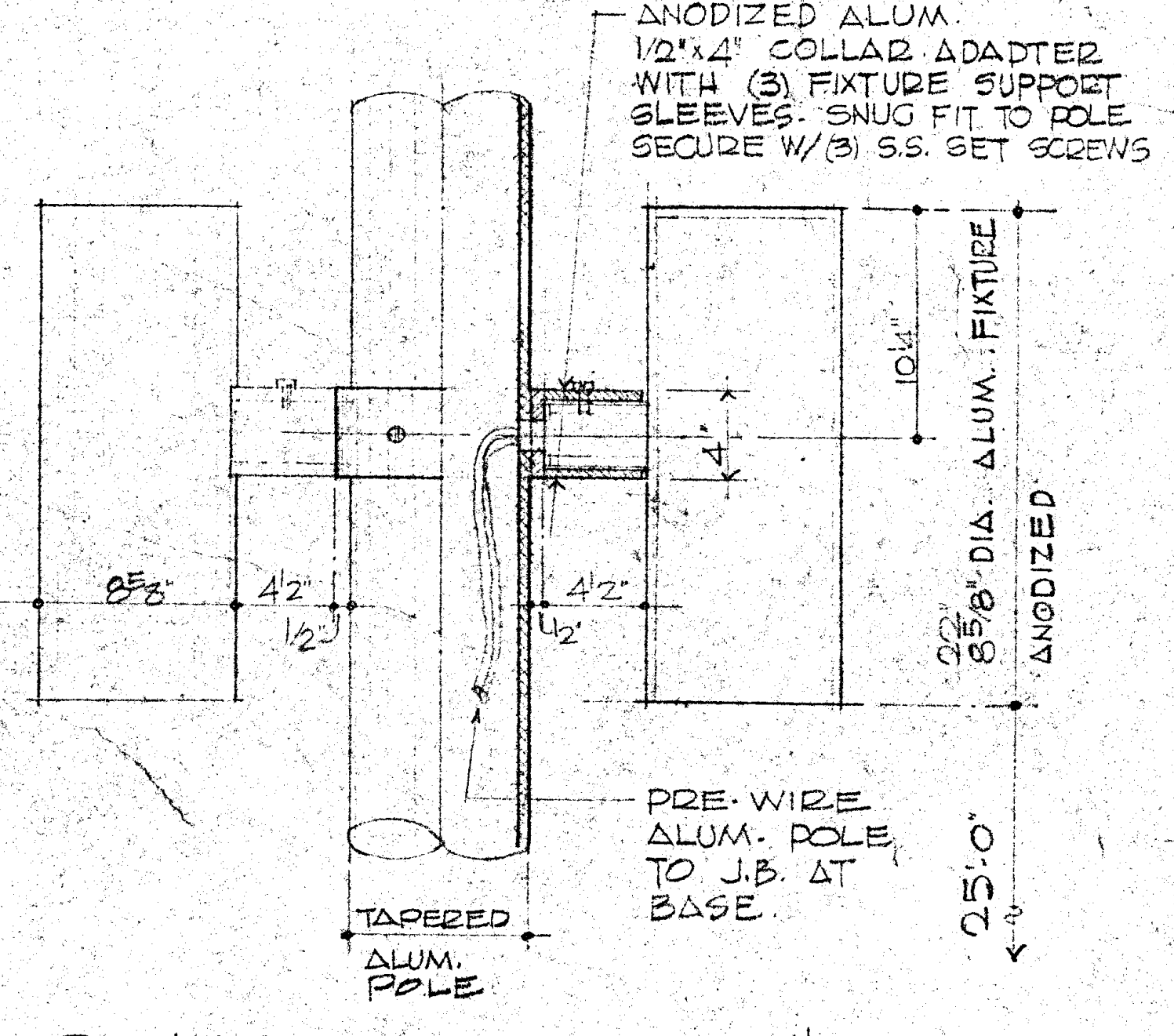
ANODIZED ALUM. 1½"×¼" COLLAR ADAPTER WITH (3) FIXTURE SUPPORT SLEEVES - SNUG FIT TO POLE SECURE W/(3) S.S. SET SCREWS
10½"
4"
4½"
4½"
8⅝"
8⅝" DIA. ALUM. FIXTURE ANODIZED
PRE-WIRE ALUM. POLE TO J.B. AT BASE.
TAPERED ALUM. POLE
25'-0"

⑦ LIGHT UNIT 1½"=1'0"
ELEV. - SECTION

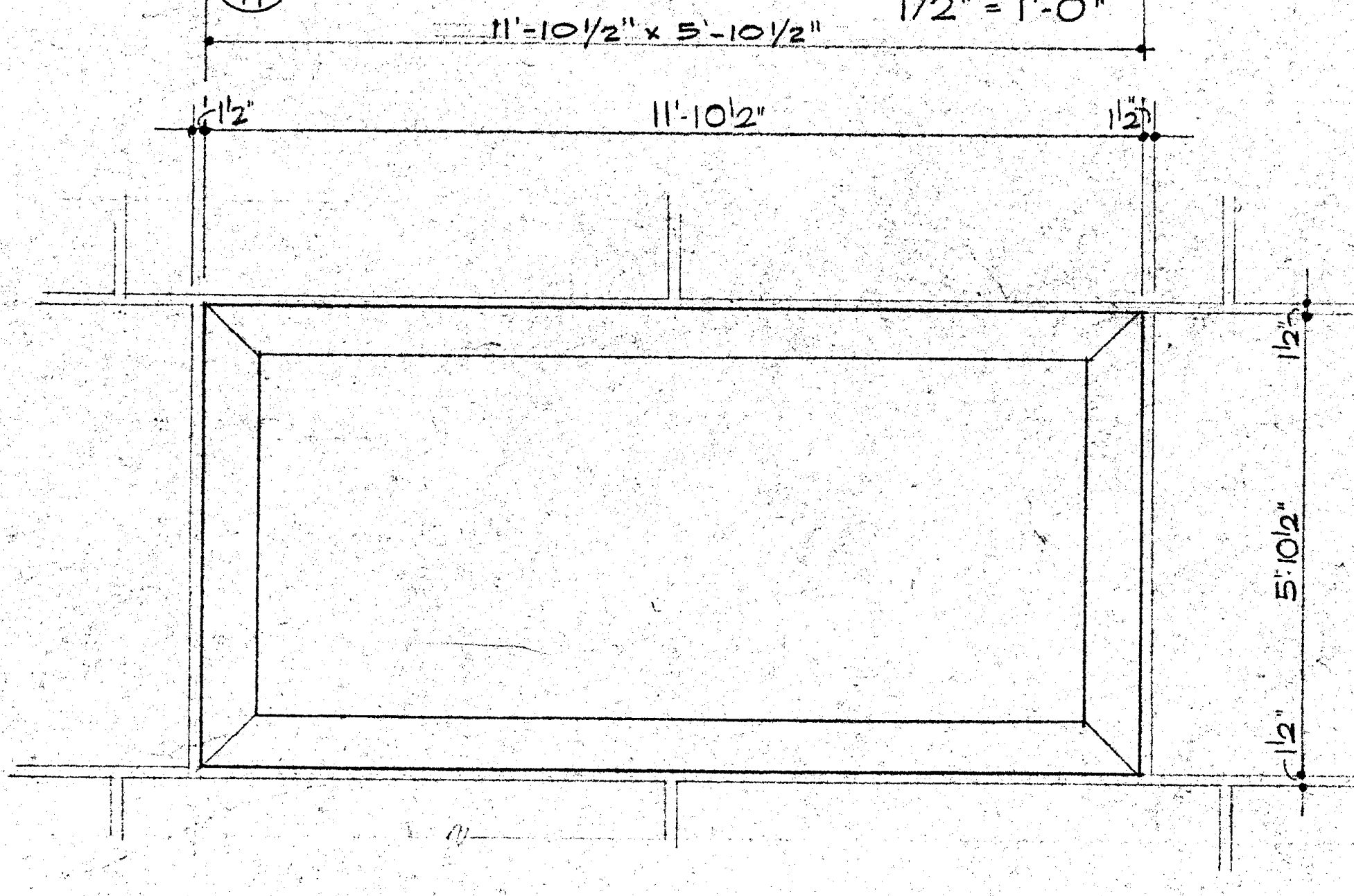
11'-10½" × 5'-10½"
1½"
11'-10½"
1½"
5'-10½"
1½"

⑨ PLAN · STATUE BASE 1/2"=1'0"

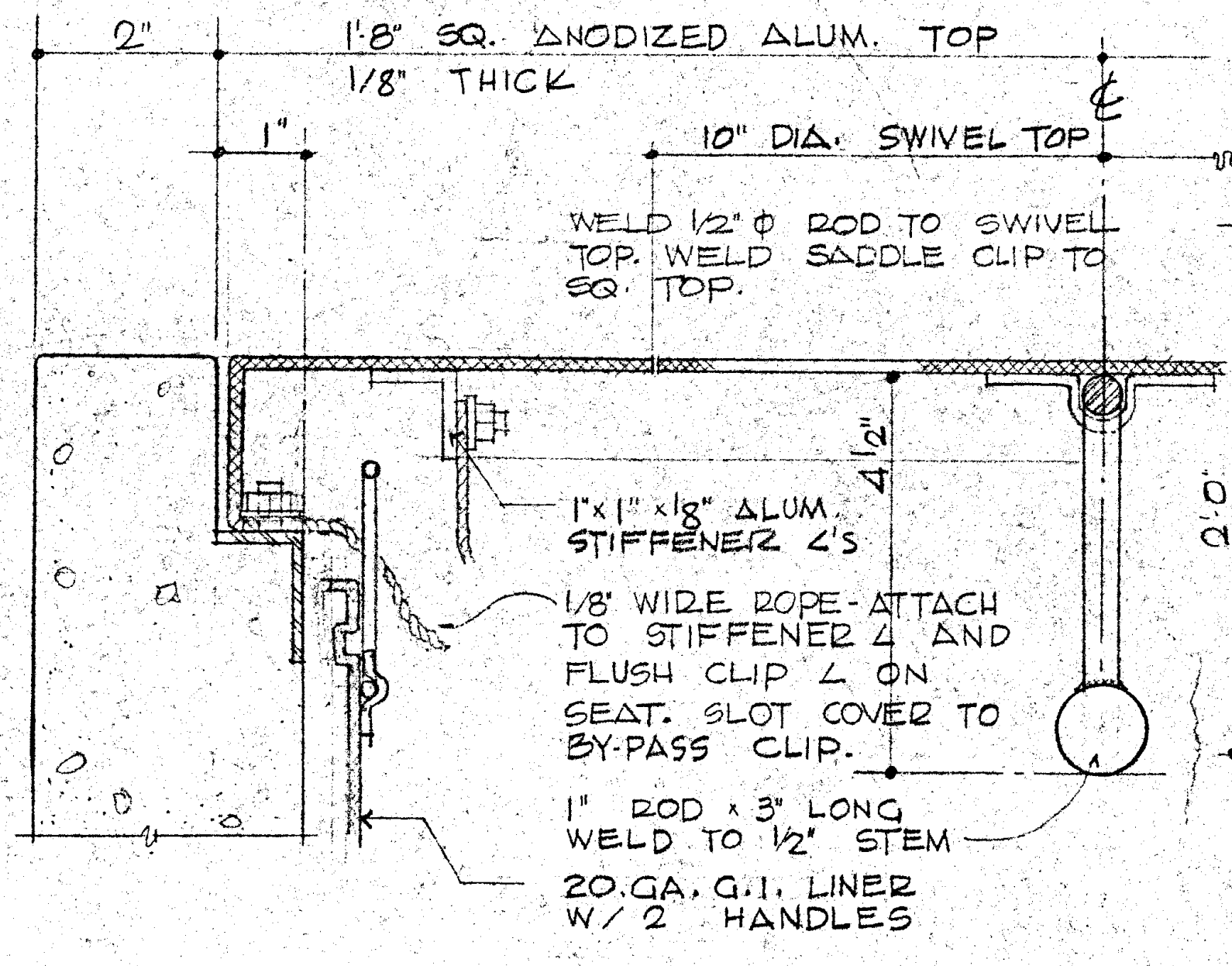
2"
1'-8" SQ. ANODIZED ALUM. TOP 1/8" THICK
1"
10" DIA. SWIVEL TOP
℄
WELD ½"Ø ROD TO SWIVEL TOP. WELD SADDLE CLIP TO SQ. TOP.
1"×1"×⅛" ALUM. STIFFENER ∠'S
⅛" WIRE ROPE - ATTACH TO STIFFENER ∠ AND FLUSH CLIP ∠ ON SEAT. SLOT COVER TO BY-PASS CLIP.
1" ROD × 3" LONG WELD TO ½" STEM
20 GA. G.I. LINER W/ 2 HANDLES

⑮ TRASH CONTAINER COVER
1/2 FULL SIZE

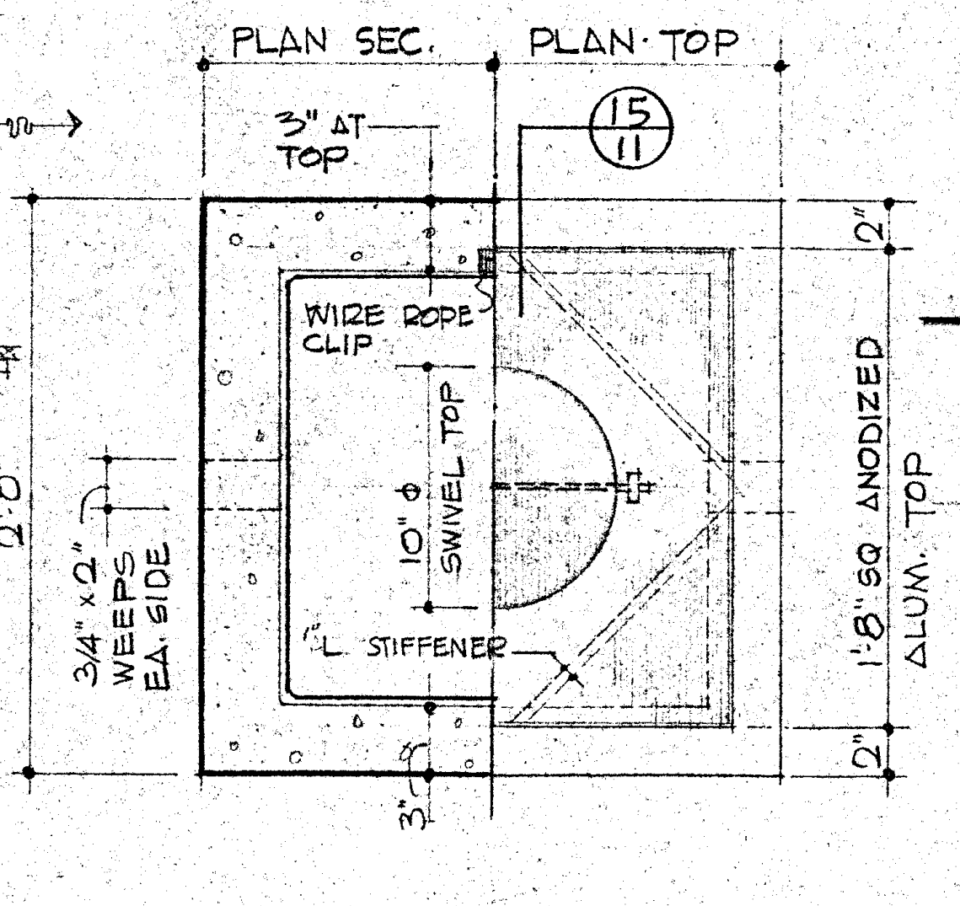
PLAN SEC.
PLAN · TOP
3" AT TOP
15/11
WIRE ROPE CLIP
10" Ø SWIVEL TOP
L STIFFENER
2'-0"
1'-8" SQ. ANODIZED ALUM. TOP
3/4"×2" WEEPS EA. SIDE

⑯ PLAN · TRASH CONTAINER 1½"=1'0"

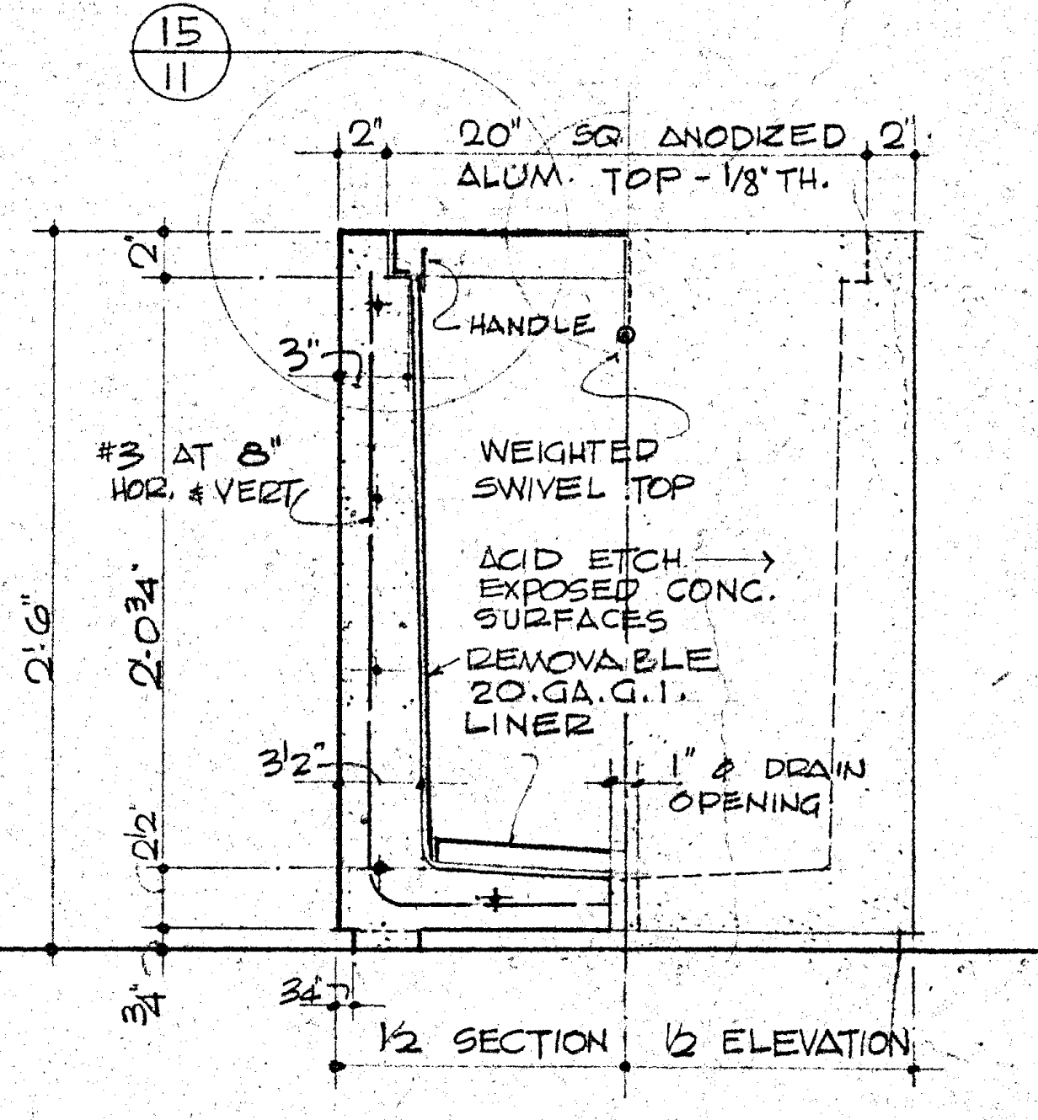
15/11
20" SQ. ANODIZED ALUM. TOP - ⅛" TH.
2"
HANDLE
#3 AT 8" HOR. & VERT.
WEIGHTED SWIVEL TOP
ACID ETCH EXPOSED CONC. SURFACES
REMOVABLE 20 GA. G.I. LINER
1" Ø DRAIN OPENING
2'-6"
2'-0¾"
3½"
½ SECTION
½ ELEVATION

⑰ SECTION/ELEVATION 1½"=1'0"
TRASH CONTAINER

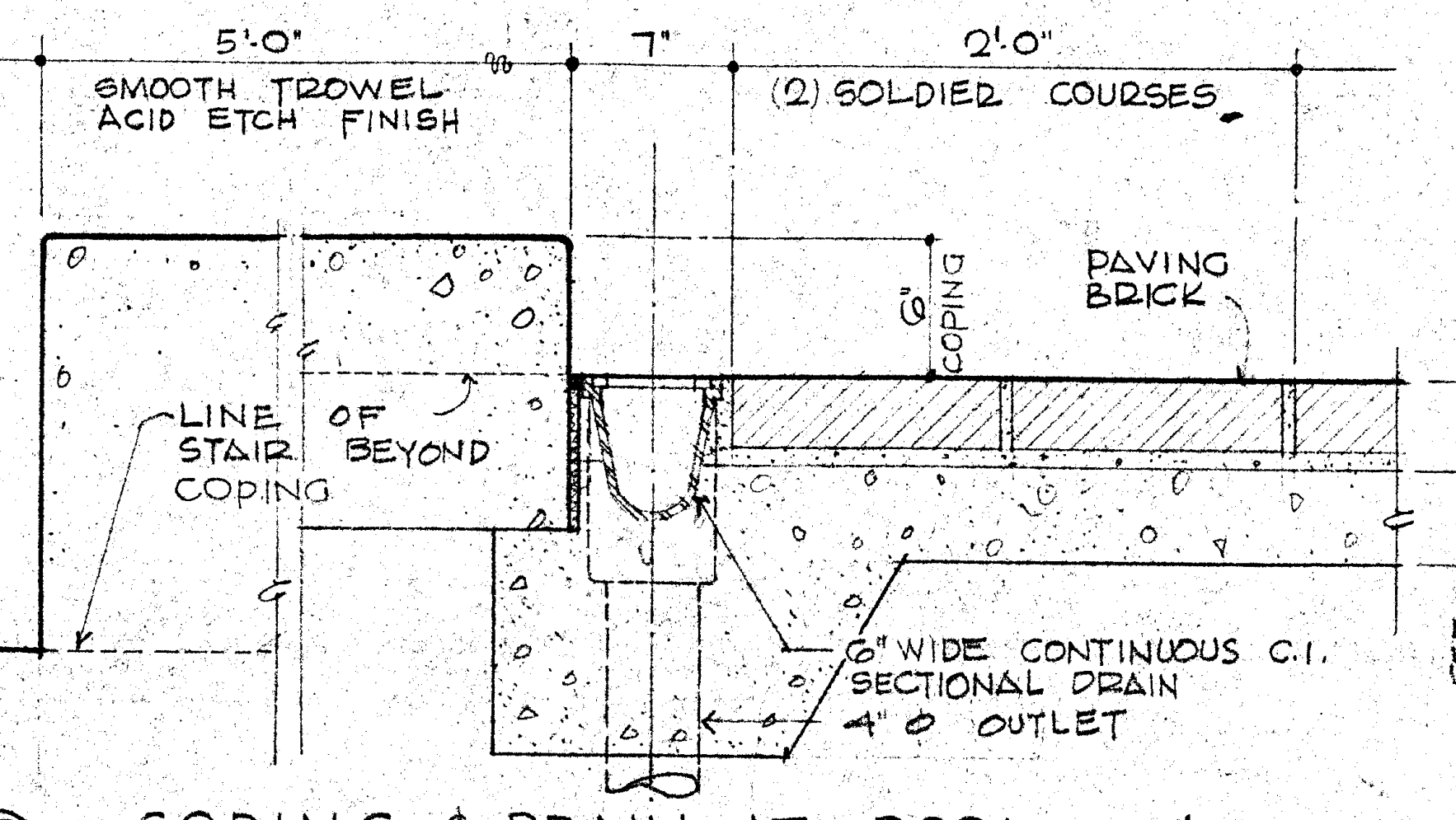
5'-0"
7"
2'-0"
SMOOTH TROWEL ACID ETCH FINISH
(2) SOLDIER COURSES
COPING
PAVING BRICK
LINE OF STAIR BEYOND
COPING
6" WIDE CONTINUOUS C.I. SECTIONAL DRAIN
4"Ø OUTLET

⑩ COPING & DRAIN AT POOL 1½"=1'0"

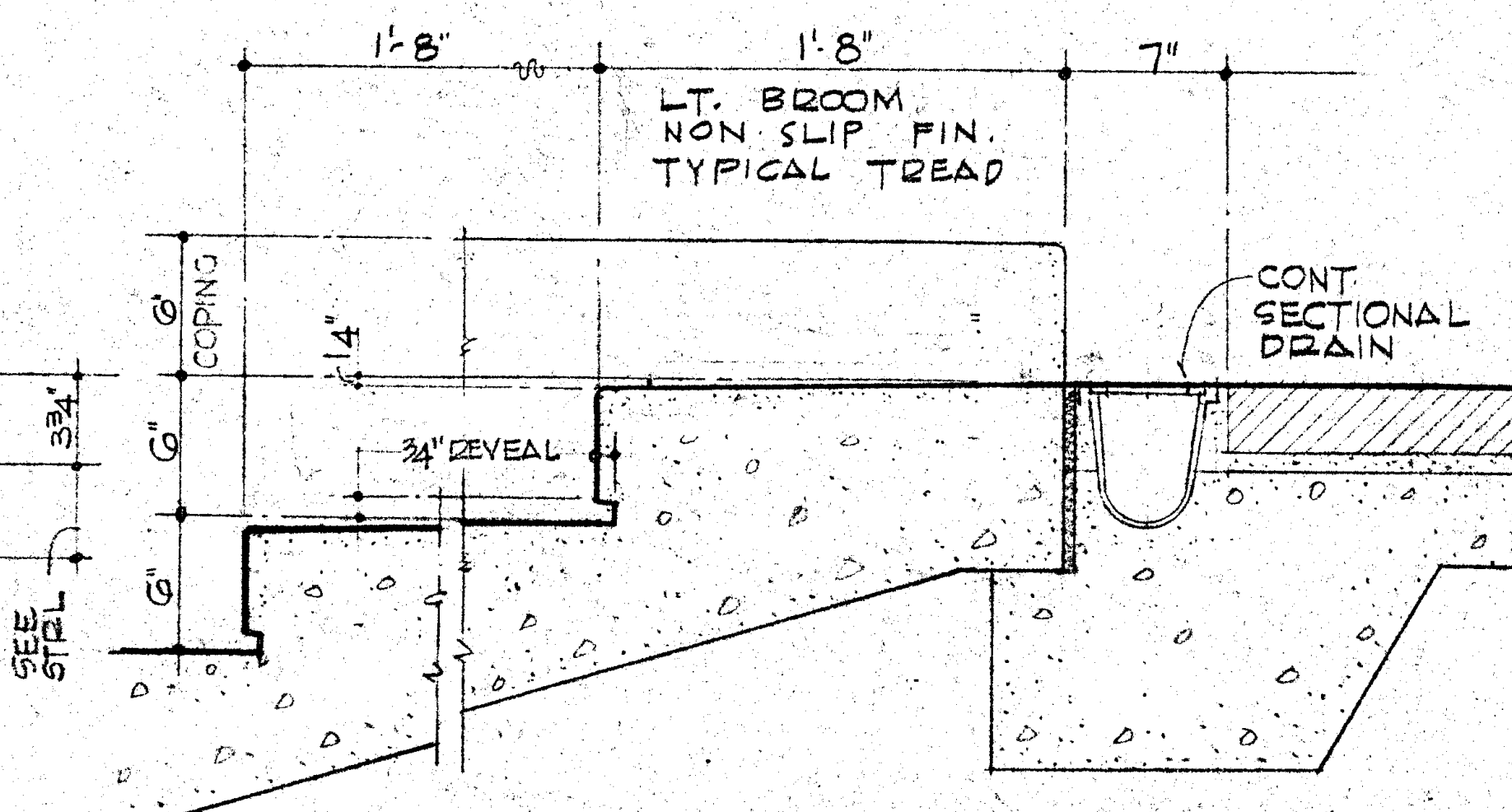
1'-8"
1'-8"
7"
LT. BROOM NON SLIP FIN. TYPICAL TREAD
CONT. SECTIONAL DRAIN
COPING
¾" REVEAL
6"
6"
6"
SEE STRL.

⑪ STAIRS & DRAIN AT POOL 1½"=1'0"
POURED IN PLACE

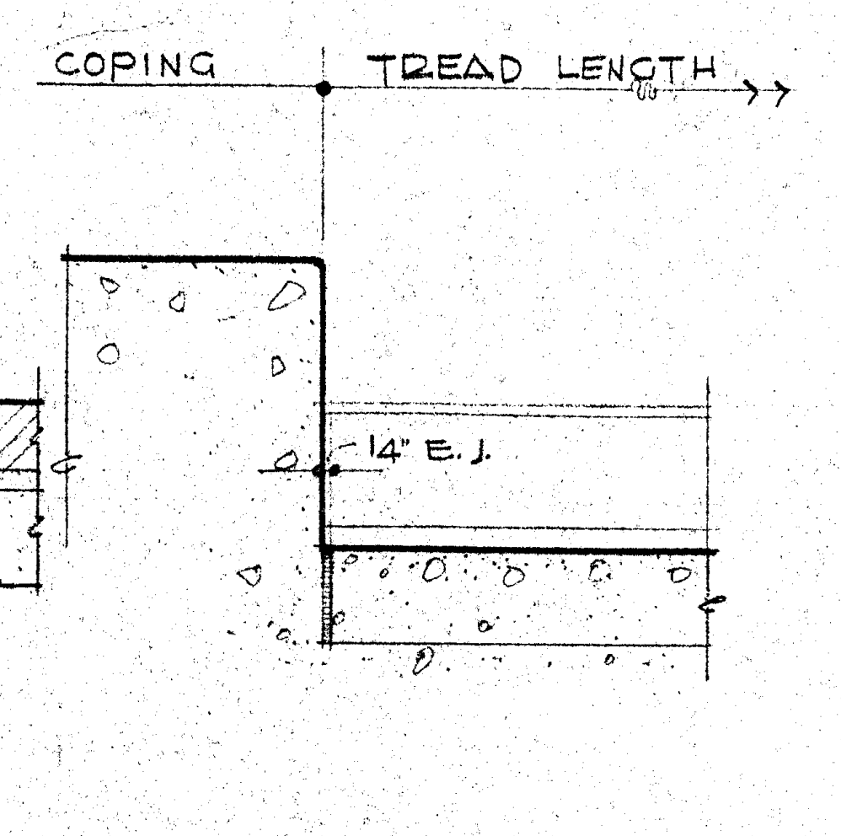
COPING
TREAD LENGTH
¼" E.J.

⑫ STRINGER EDGE 1½"=1'0"

NOTE:
FOR ALL REINF. STEEL IN CONCRETE NOT INDICATED ON DETAILS, THIS SHEET, SEE STRUCTURAL DRAWINGS.

EMBARCADERO PLAZA
EMBARCADERO LOWER MARKET APPROVED REDEVELOPMENT PROJECT AREA E1

MISCELLANEOUS DETAILS

SAN FRANCISCO REDEVELOPMENT AGENCY IN COOPERATION
WITH THE SAN FRANCISCO RECREATION AND PARK DEPARTMENT
AND SAN FRANCISCO DEPARTMENT OF PUBLIC WORKS

JOINT VENTURE ARCHITECTS:
LAWRENCE HALPRIN & ASSOCIATES Lawrence Halprin
JOHN S. BOLLES ASSOCIATES
MARIO J. CIAMPI & ASSOCIATES Mario J. Ciampi

SCALE: AS NOTED
DATE: JAN. 25, 1969
DRAWN BY: W.H., J.V., H.N.

11

SHEET 11 OF 12

EF
EC
NC
NE
NK
PA
EO
EM
EJ
NL
NH AND EH
EN
DELETE
GLASS INSERTS
GLASS INSERTS SEE (B/E4) (TYP.)
POURED CONC. BASE
METAL RAIL SEE SH. #7, 9, & #12 FOR CONTINUATION
EAST FACE
NORTH FACE
TOP OF CONCRETE
9'-10"
4'-6"
10'-10"
2"
125°
90°
35°

ISOMETRICS OF PRECAST CONCRETE SCULPTURE ELEMENTS

SCALE: 1/4" = 1'-0"

1. SHOWING EXTERIOR PROFILE AND EXTERIOR DIMENSIONS ONLY.
2. SEE STRUCTURAL DRAWINGS FOR PRECAST CONCRETE SCULPTURE, FOR DETAILS, & CONNECTIONS.
3. SEE MECHANICAL & ELECTRICAL DRAWINGS FOR PIPING, ANCHORS, CONDUITS, & LIGHTS.
4. GLASS INSERTS SHOWN ARE FURNISHED BY SCULPTOR-DESIGNER, AND INSTALLED BY CONTRACTOR. VERIFY LOCATIONS PRIOR TO INSTALLATION. FOR DETAIL OF INSERT SEE (B/E4), SHEET E-4.
5. FOR COVERS FOR STRUCTURAL CONNECTIONS, SEE DETAILS.

EMBARCADERO PLAZA
EMBARCADERO LOWER MARKET APPROVED REDEVELOPMENT PROJECT AREA E1

ISOMETRICS · SCULPTURE UNITS

SAN FRANCISCO REDEVELOPMENT AGENCY IN COOPERATION
WITH THE SAN FRANCISCO RECREATION AND PARK DEPARTMENT
AND SAN FRANCISCO DEPARTMENT OF PUBLIC WORKS

JOINT VENTURE ARCHITECTS:
LAWRENCE HALPRIN & ASSOCIATES Lawrence Halprin
JOHN S. BOLLES ASSOCIATES
MARIO J. CIAMPI & ASSOCIATES

SCALE: 1/4" = 1'-0"
DATE: JAN. 25, 1969
DRAWN BY: H.N.

10

SHEET 10 OF 12

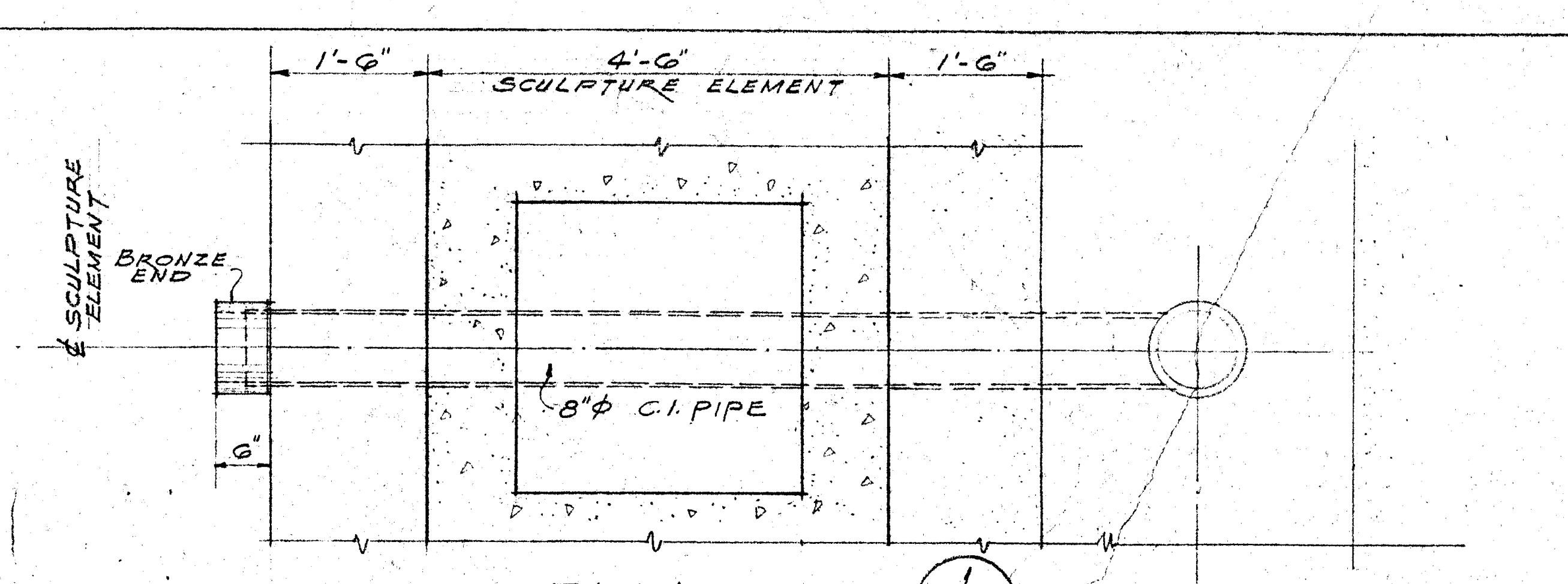
1'-6"
4'-6"
SCULPTURE ELEMENT
1'-6"
℄ SCULPTURE ELEMENT
BRONZE END
9"
8"φ C.I. PIPE

PLAN AT PIPE (1/9)
SCALE: 3/4" = 1'-0"

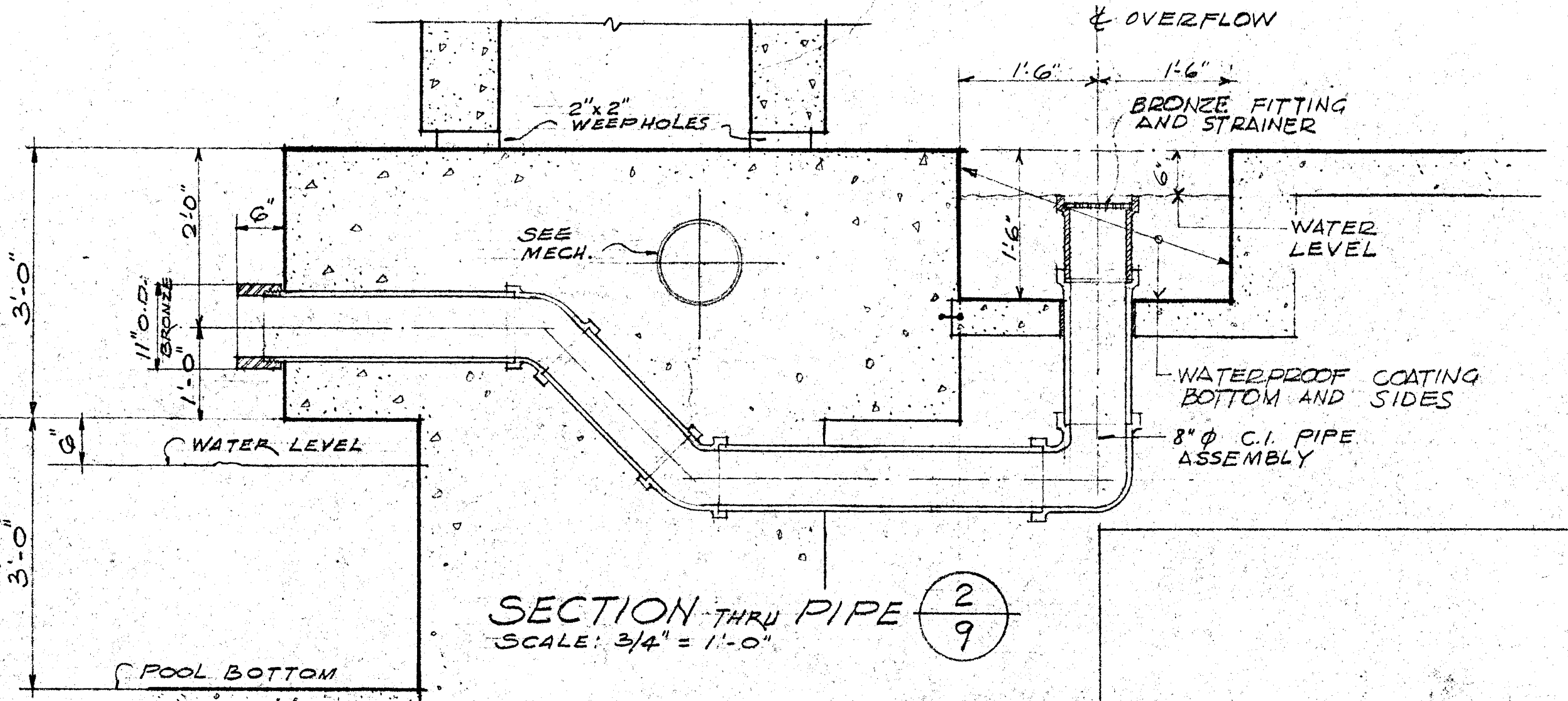
℄ OVERFLOW
1'-6"
1'-6"
BRONZE FITTING AND STRAINER
2"x2" WEEPHOLES
SEE MECH.
6"
2'-0"
3'-0"
11" O.D. BRONZE
1'-0"
1'-6"
6"
WATER LEVEL
WATERPROOF COATING BOTTOM AND SIDES
8"φ C.I. PIPE ASSEMBLY
6"
WATER LEVEL
3'-0"
POOL BOTTOM

SECTION THRU PIPE (2/9)
SCALE: 3/4" = 1'-0"

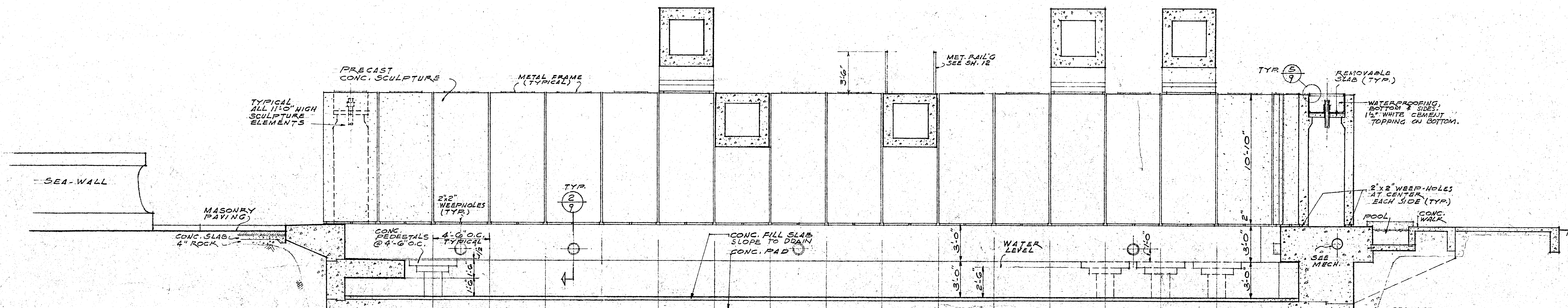
SEA-WALL
MASONRY PAVING
CONC. SLAB
4" ROCK
PRECAST CONC. SCULPTURE
TYPICAL ALL 11'-0" HIGH SCULPTURE ELEMENTS
METAL FRAME (TYPICAL)
3'-6"
MET. RAIL'G SEE SH. 12
TYP. 5/9
REMOVABLE SLAB (TYP.)
WATERPROOFING, BOTTOM & SIDES. 1½" WHITE CEMENT TOPPING ON BOTTOM.
2"x2" WEEPHOLES (TYP.)
TYP. 2/9
CONC. PEDESTALS @ 4'-6" O.C.
4'-6" O.C. TYPICAL
1'-6"
1'-6"
CONC. FILL SLAB SLOPE TO DRAIN
CONC. PAD
WATER LEVEL
3'-0"
3'-0"
2'-6"
1'-0"
10'-10"
2"
2"x2" WEEP-HOLES AT CENTER EACH SIDE (TYP.)
POOL
CONC. WALK
SEE MECH.
3'-0"
6"
3'-0"
DRAINAGE ROCK
12"
NR
NQ
NP
NO
NN
NM
NL
NK
NJ
NI
NH
NG
NF
NE
ND
NC
NB
A

SECTION (A/9)
SCALE: 1/4" = 1'-0"

LOOKING TOWARDS
SOUTH FACE OF NORTH WALL
PRECAST CONCRETE SCULPTURE

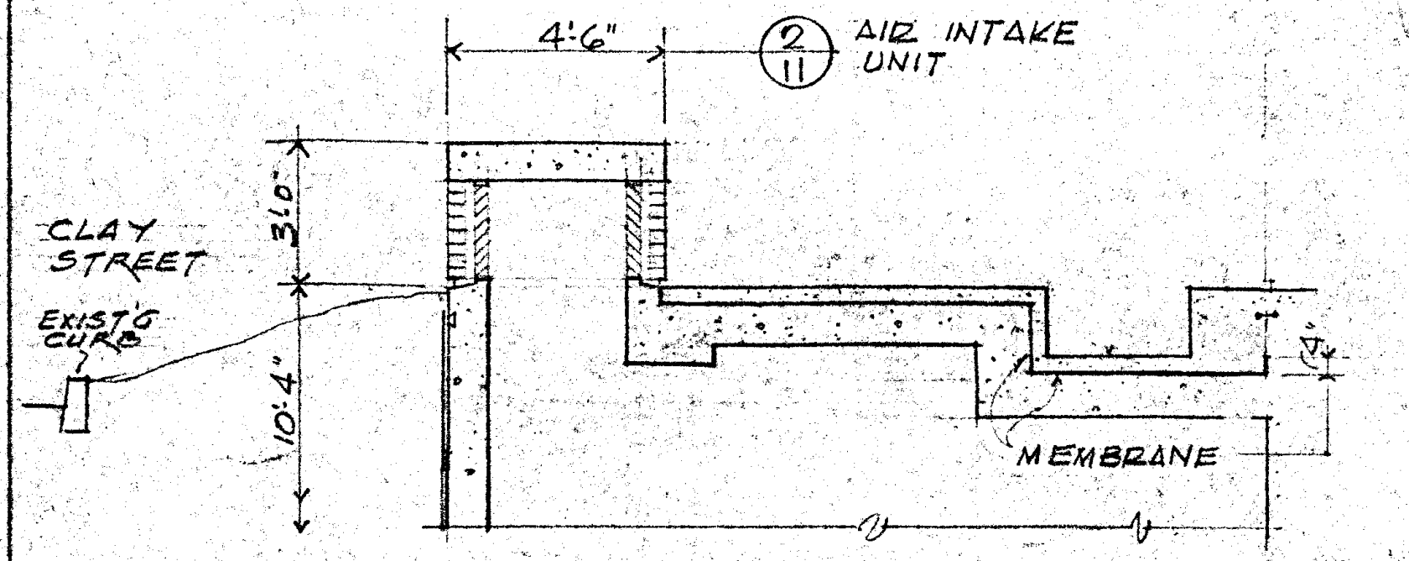
4'-6"
2/11 AIR INTAKE UNIT
CLAY STREET
EXIST'G CURB
3'-0"
10'-4"
4"
MEMBRANE

(D/9) SECT. THRU LOUVERS
AT MECH. VAULT 1/4" = 1'-0"

SEE NOTES ON SHEET 8

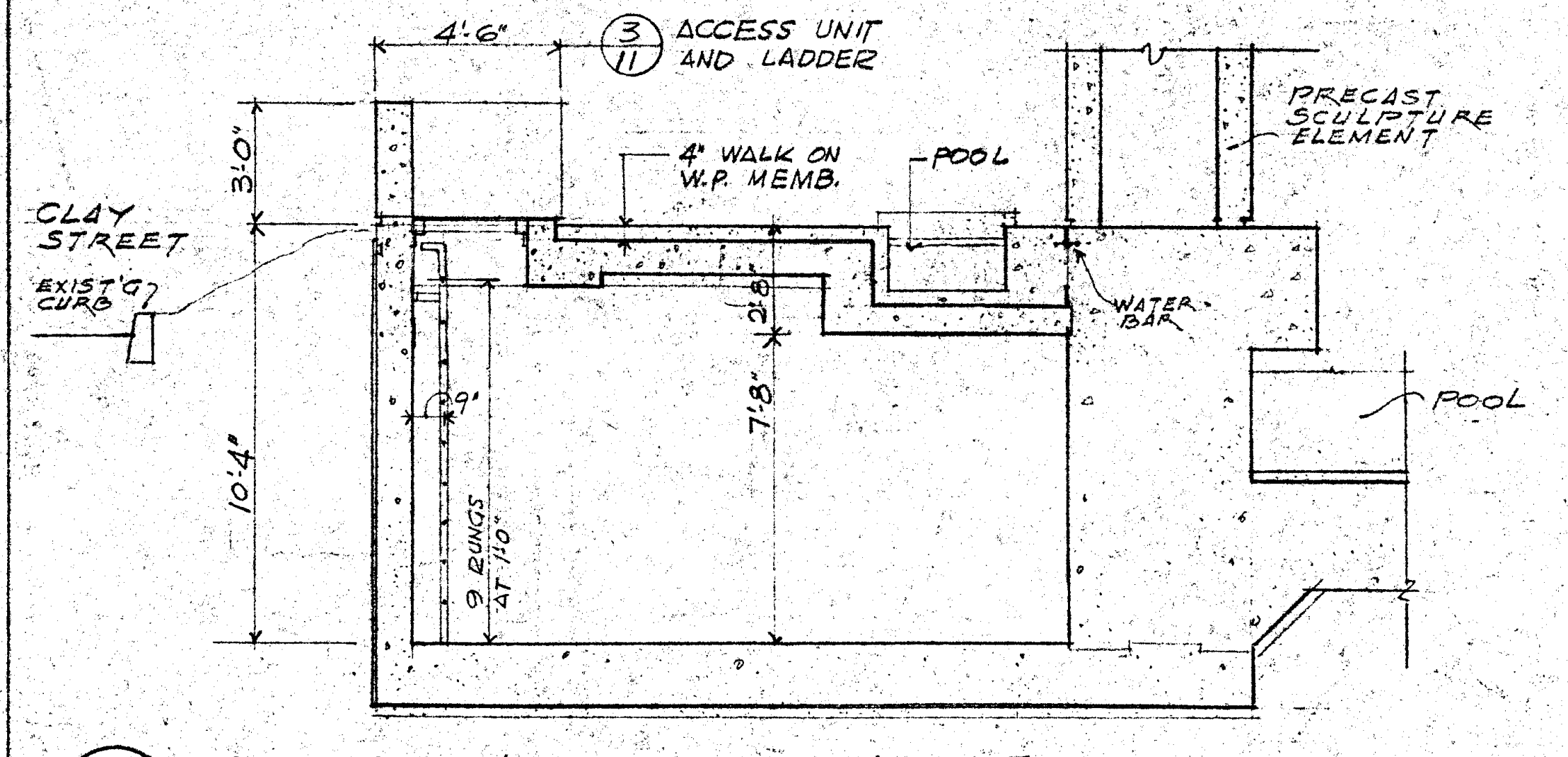
4'-6"
3/11 ACCESS UNIT AND LADDER
PRECAST SCULPTURE ELEMENT
4" WALK ON W.P. MEMB.
POOL
CLAY STREET
EXIST'G CURB
3'-0"
10'-4"
2'-8"
7'-8"
9"
9 RUNGS AT 1'-0"
WATER BAR
POOL

(C/9) SECTION THRU MECH. VAULT
LADDER AND HATCH 1/4" = 1'-0"

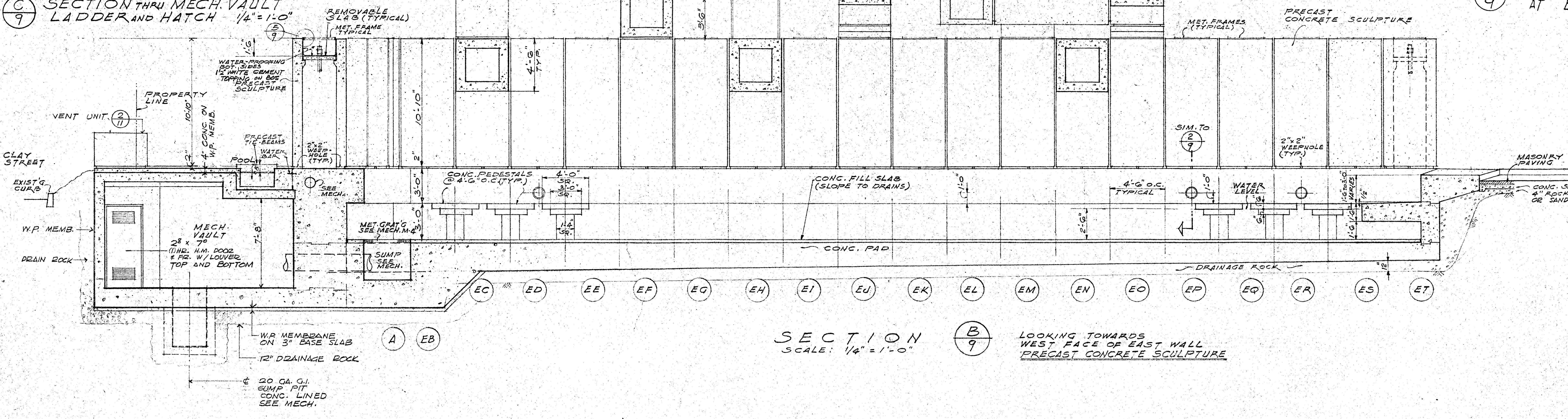
5/9
REMOVABLE SLAB (TYPICAL)
MET. FRAME TYPICAL
1'-6"
WATER-PROOFING BOT. SIDES 1½" WHITE CEMENT TOPPING ON BOT. PRECAST SCULPTURE
PROPERTY LINE
VENT UNIT 2/11
10'-10"
4" CONC. ON W.P. MEMB.
2"
PRECAST TIE-BEAMS
WATER BAR
POOL
8"
2"x2" WEEP-HOLE (TYP.)
CLAY STREET
EXIST'G CURB
W.P. MEMB.
DRAIN ROCK
MECH. VAULT
2⁸ x 7⁰
(1) HR. H.M. DOOR & FR. W/LOUVER TOP AND BOTTOM
7'-8"
SEE MECH.
MET. GRAT'G SEE MECH. M-4
SUMP SEE MECH.
W.P. MEMBRANE ON 3" BASE SLAB
12" DRAINAGE ROCK
℄ 20 GA. G.I. SUMP PIT CONC. LINED SEE MECH.
A
EB
METAL RAIL
3'-6"
4'-6" TYP.
10'-10"
2"
3'-0"
3'-0"
CONC. PEDESTALS @ 4'-6" O.C. (TYP.)
4'-0" SQ.
3'-0" SQ.
1'-4" SQ.
CONC. FILL SLAB (SLOPE TO DRAINS)
CONC. PAD
1'-0"
2'-6"
4'-6" O.C. TYPICAL
SIM. TO 2/9
1'-0"
WATER LEVEL
6"
2"x2" WEEPHOLE (TYP.)
1'-6" TO 3'-0" VARIES
1'-6"
1'-6"
MET. FRAMES (TYPICAL)
PRECAST CONCRETE SCULPTURE
MASONRY PAVING
CONC. SLAB
4" ROCK OR SAND
DRAINAGE ROCK
12"
EC
ED
EE
EF
EG
EH
EI
EJ
EK
EL
EM
EN
EO
EP
EQ
ER
ES
ET

SECTION (B/9)
SCALE: 1/4" = 1'-0"

LOOKING TOWARDS
WEST FACE OF EAST WALL
PRECAST CONCRETE SCULPTURE

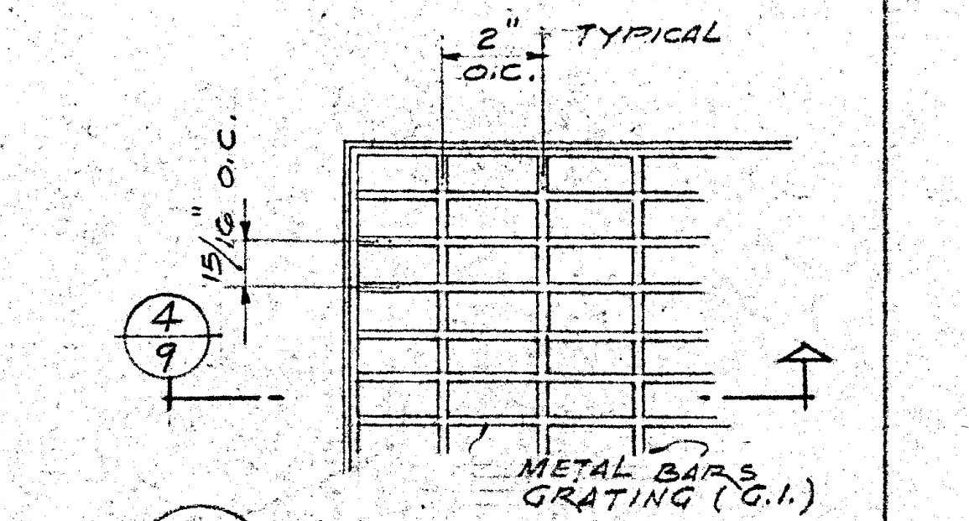
2" O.C.
TYPICAL
1½" O.C.
4/9
METAL BARS GRATING (G.I.)

(3/9) PARTIAL PLAN
METAL GRATING
SCALE: 3" = 1'-0"

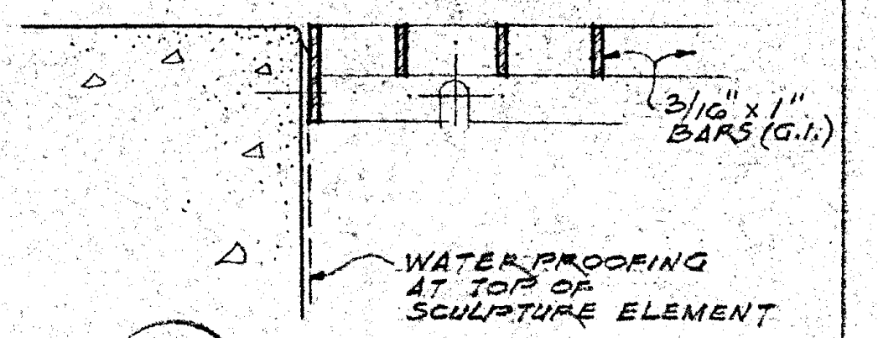
3/16" x 1" BARS (G.I.)
WATERPROOFING AT TOP OF SCULPTURE ELEMENT

(4/9) SECTION THRU
METAL GRATING
SCALE: 3" = 1'-0"

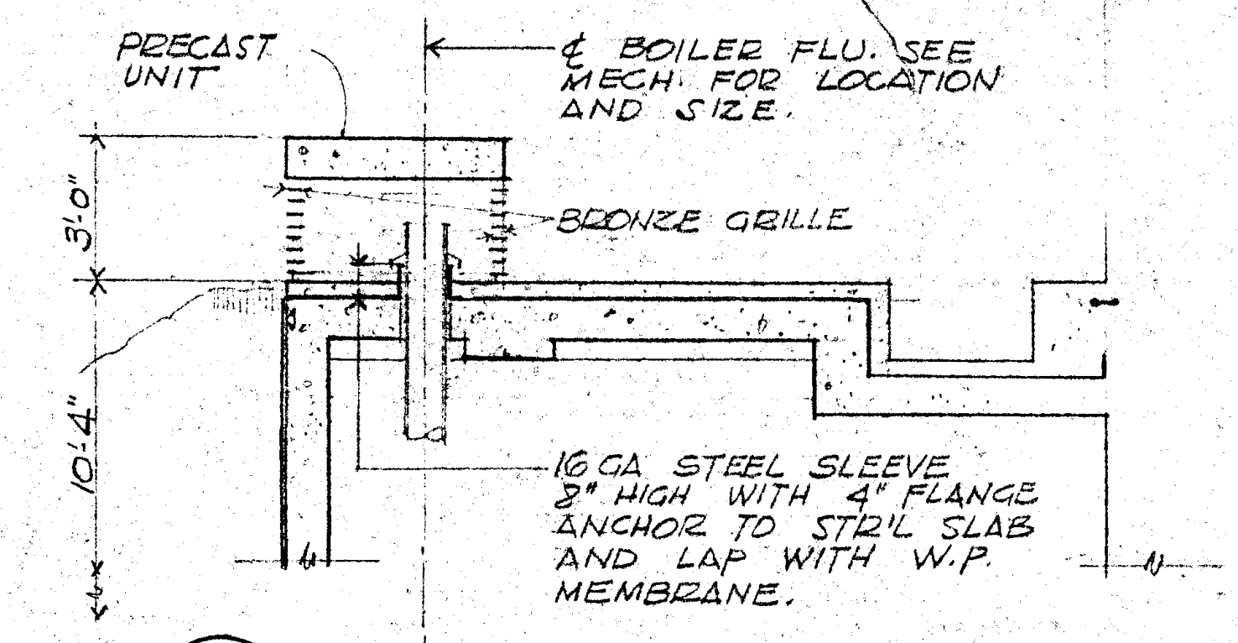
PRECAST UNIT
℄ BOILER FLU. SEE MECH. FOR LOCATION AND SIZE.
BRONZE GRILLE
3'-0"
10'-4"
16 GA. STEEL SLEEVE 8" HIGH WITH 4" FLANGE ANCHOR TO STR'L SLAB AND LAP WITH W.P. MEMBRANE.

(F/9) SECTION THRU VENT UNIT
AT BOILER FLU

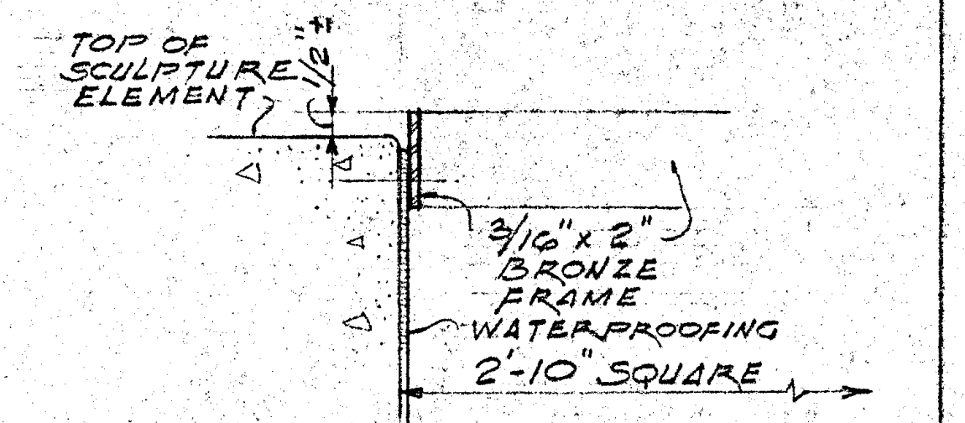
TOP OF SCULPTURE ELEMENT
½"
3/16" x 2" BRONZE FRAME
WATERPROOFING
2'-10" SQUARE

(5/9) SECTION THRU
METAL FRAME
SCALE: 3" = 1'-0"

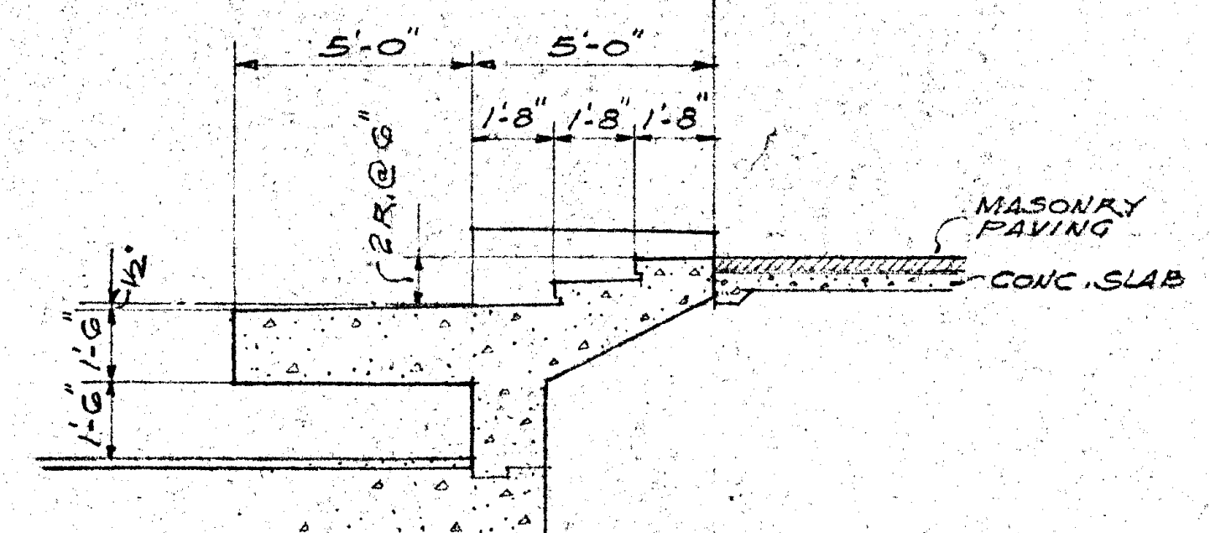
5'-0"
5'-0"
1'-8"
1'-8"
1'-8"
2R. @ 6"
½"
1'-6"
1'-6"
MASONRY PAVING
CONC. SLAB

SECTION THRU STEPS (E/9)
AT SCULPTURE POOL
SCALE: 1/4" = 1'-0"

EMBARCADERO PLAZA

EMBARCADERO LOWER MARKET APPROVED REDEVELOPMENT PROJECT AREA E1

SCULPTURE ELEVATIONS

SAN FRANCISCO REDEVELOPMENT AGENCY IN COOPERATION
WITH THE SAN FRANCISCO RECREATION AND PARK DEPARTMENT
AND SAN FRANCISCO DEPARTMENT OF PUBLIC WORKS

JOINT VENTURE ARCHITECTS:
LAWRENCE HALPRIN & ASSOCIATES Lawrence Halprin
JOHN S. BOLLES ASSOCIATES
MARIO J. CIAMPI & ASSOCIATES Mario J. Ciampi

SCALE: AS NOTED
DATE: JAN. 25, 1969
DRAWN BY: H.N.

9

SHEET 9 OF 12

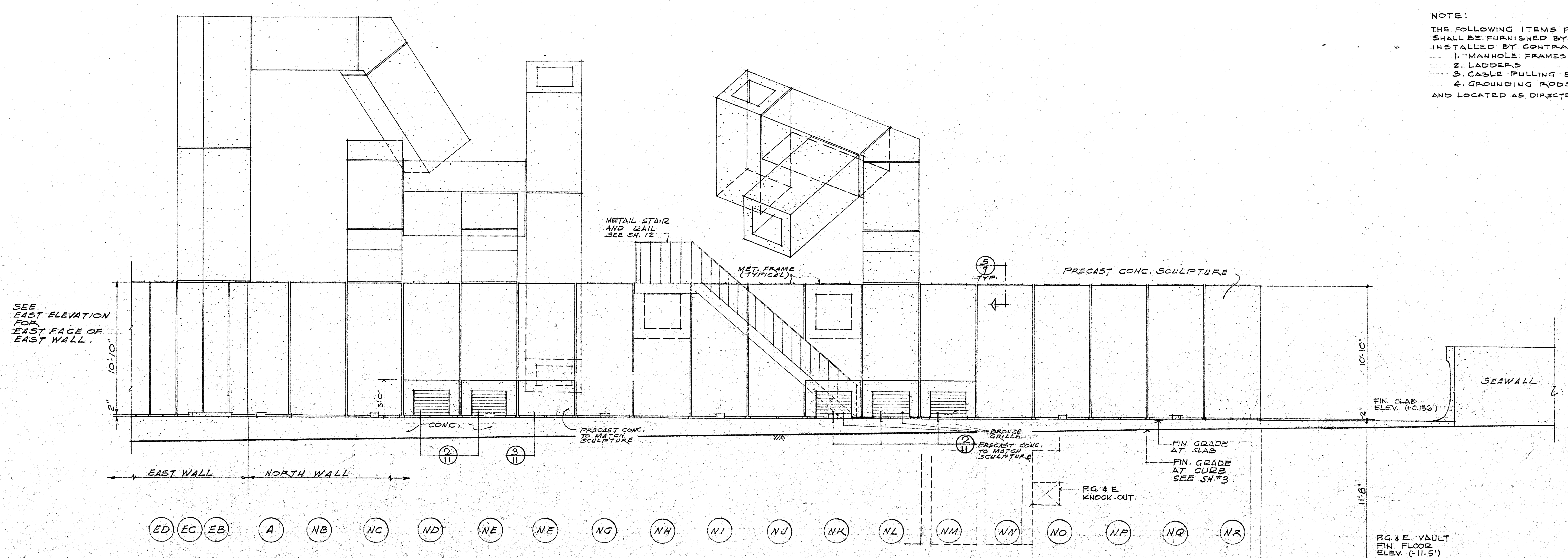
SEE EAST ELEVATION FOR EAST FACE OF EAST WALL.
10'-10"
2"
3'-0"
METAL STAIR AND RAIL SEE SH. 12
MET. FRAME (TYPICAL)
5/9 TYP.
PRECAST CONC. SCULPTURE
SEAWALL
10'-10"
FIN. SLAB ELEV. (+0.156')
CONC.
PRECAST CONC. TO MATCH SCULPTURE
BRONZE GRILLE
PRECAST CONC. TO MATCH SCULPTURE
FIN. GRADE AT SLAB
FIN. GRADE AT CURB SEE SH. #3
P.G.& E. KNOCK-OUT
11'-8"
P.G.& E. VAULT FIN. FLOOR ELEV. (-11.5')
2/11
3/11
2/11
EAST WALL
NORTH WALL
ED EC EB A NB NC ND NE NF NG NH NI NJ NK NL NM NN NO NP NQ NR

NORTH ELEVATION
SCALE: 1/4" = 1'-0"

NORTH FACE OF NORTH WALL
ELEVATION FROM CLAY STREET
PRECAST CONCRETE SCULPTURE

NOTE:

THE FOLLOWING ITEMS FOR P.G.& E. VAULT SHALL BE FURNISHED BY P.G.& E. AND INSTALLED BY CONTRACTOR:

1. MANHOLE FRAMES AND COVERS
2. LADDERS
3. CABLE PULLING EYES.
4. GROUNDING RODS

AND LOCATED AS DIRECTED BY P.G.& E.

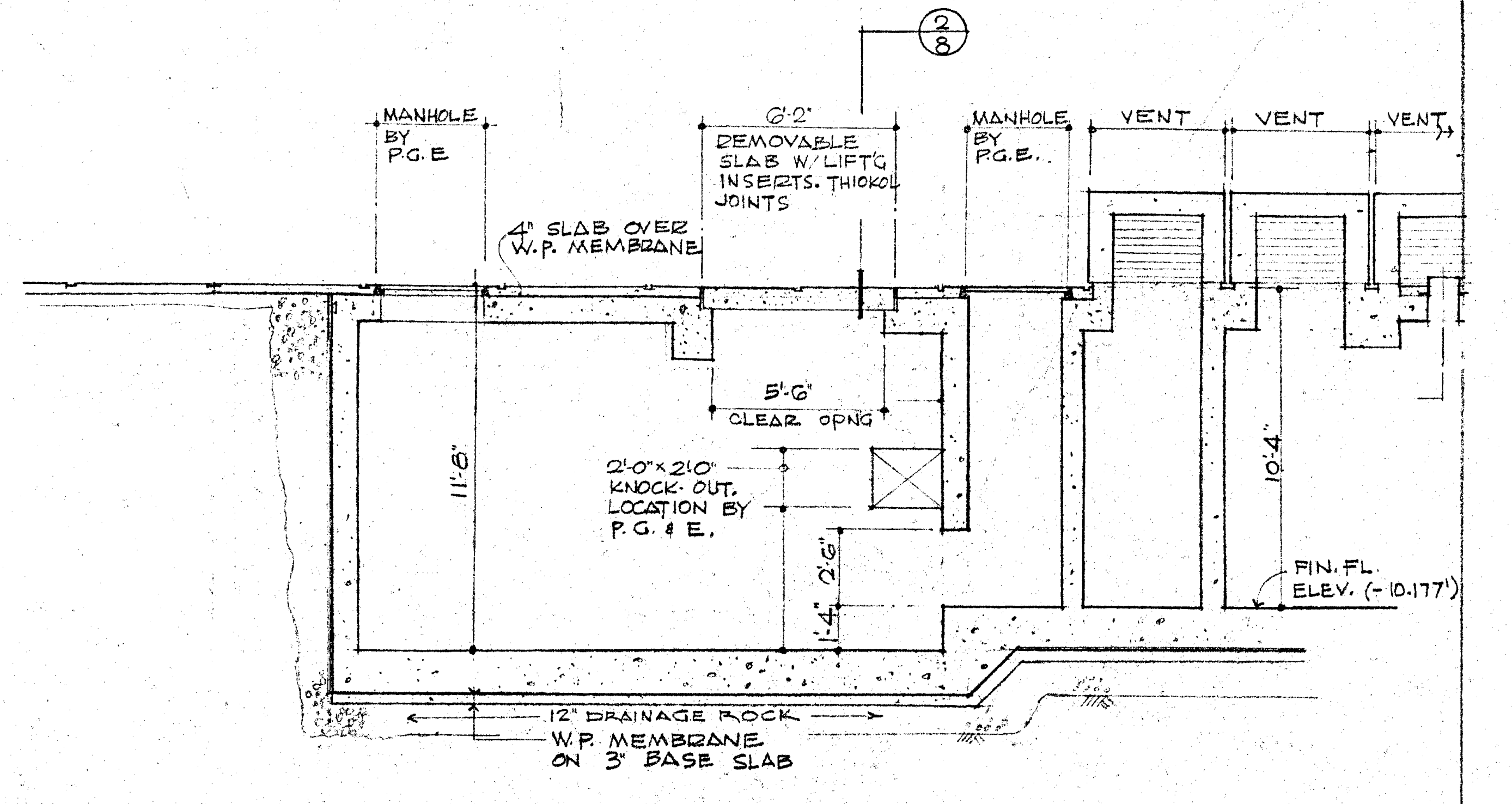
2/8
MANHOLE BY P.G.E
6'-2"
REMOVABLE SLAB W/ LIFT'G INSERTS. THIOKOL JOINTS
MANHOLE BY P.G.E.
VENT
VENT
VENT
4" SLAB OVER W.P. MEMBRANE
5'-6" CLEAR OPNG
11'-8"
2'-0"×2'-0" KNOCK-OUT. LOCATION BY P.G.& E.
2'-6"
1'-4"
10'-4"
FIN. FL. ELEV. (-10.177')
12" DRAINAGE ROCK
W.P. MEMBRANE ON 3" BASE SLAB

1/8 P.G.& E. VAULT 1/4" = 1'-0"
LONGITUDINAL SECTION

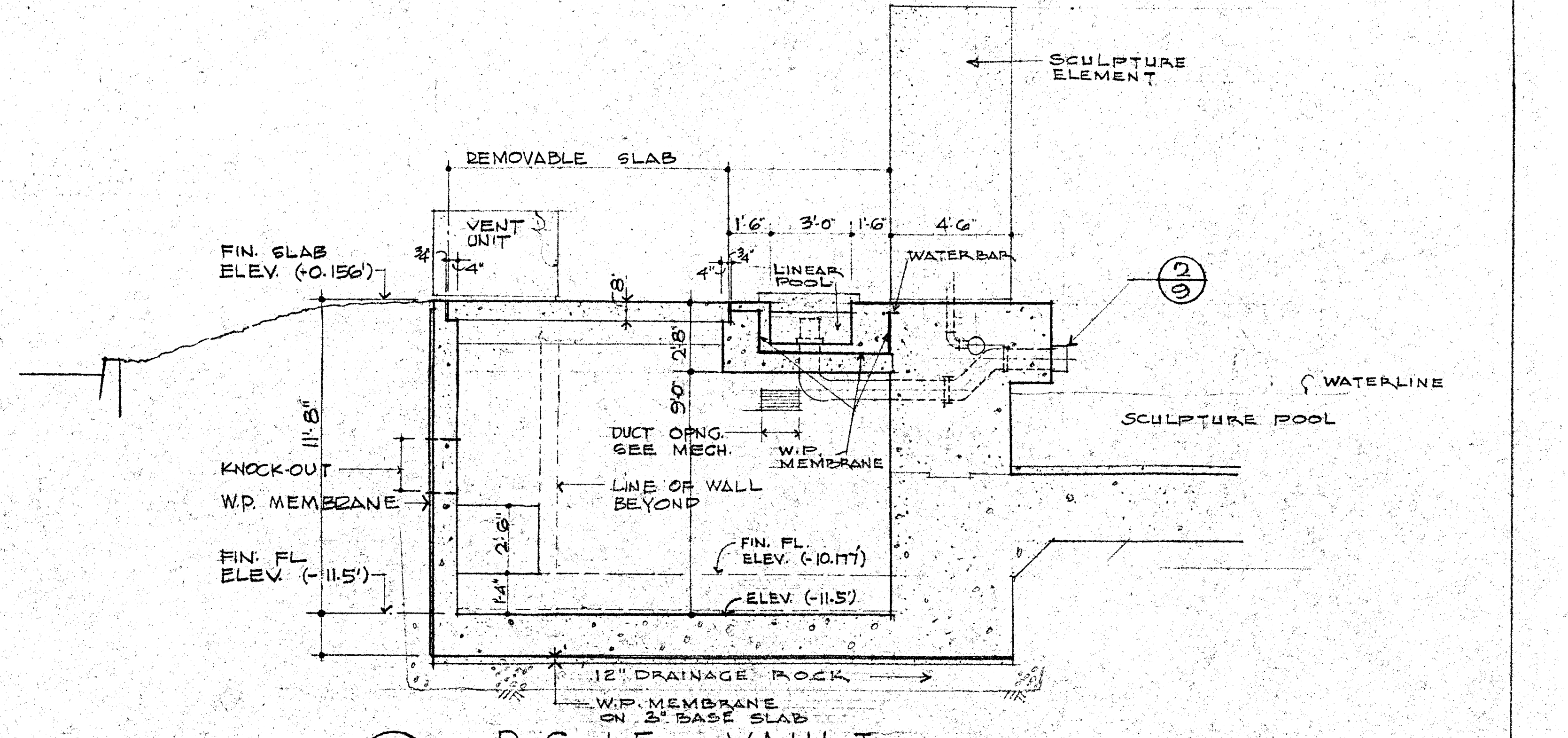
SCULPTURE ELEMENT
REMOVABLE SLAB
VENT UNIT
3/4"
4"
1'-6" 3'-0" 1'-6" 4'-6"
WATERBAR
LINEAR POOL
FIN. SLAB ELEV. (+0.156')
8"
2'-8"
9'-0"
2/9
WATERLINE
SCULPTURE POOL
11'-8"
DUCT OPNG. SEE MECH.
W.P. MEMBRANE
KNOCK-OUT
W.P. MEMBRANE
LINE OF WALL BEYOND
2'-6"
FIN. FL. ELEV. (-10.177')
FIN. FL. ELEV. (-11.5')
1'-4"
ELEV. (-11.5')
12" DRAINAGE ROCK
W.P. MEMBRANE ON 3" BASE SLAB

2/8 P.G.& E. VAULT 1/4" = 1'-0"
CROSS SECTION THRU MECHANICAL VAULT SIMILAR. SEE SH. 9 FOR VARIATIONS.

NOTES:

1. FOR EXTERIOR DIMENSIONS NOT INDICATED ON THIS SHEET, SEE "ISOMETRICS OF PRECAST CONCRETE SCULPTURE ELEMENTS", SHEET 10.
2. FOR LOCATION OF GLASS INSERTS TO BE FURNISHED BY SCULPTOR-DESIGNER, AND INSTALLED BY CONTRACTOR, SEE SHEET 10. FOR DETAIL SEE B/E4.
3. FOR PIPING, ANCHORS, CONDUITS, AND LIGHTS, SEE MECHANICAL & ELECTRICAL DRAWINGS.
4. FOR STRUCTURAL CONNECTIONS, SEE STRUCTURAL DRAWINGS FOR PRECAST CONCRETE SCULPTURE
5. FOR COVERS FOR STRUCTURAL CONNECTIONS, SEE DETAILS.

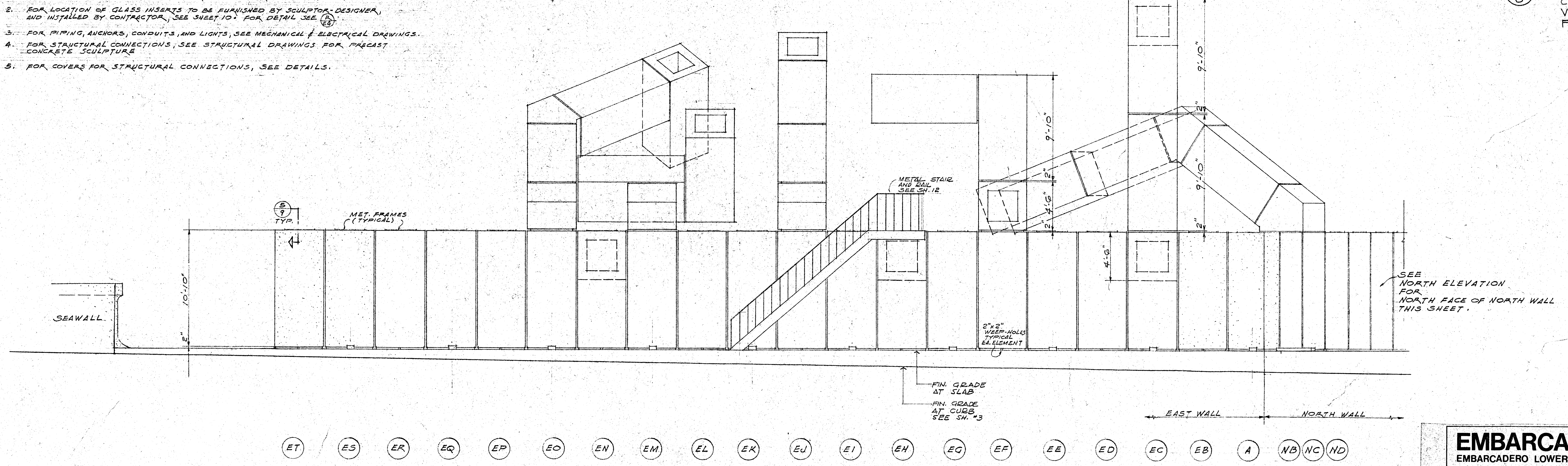
9'-10"
9'-10"
9'-10"
2"
2'-6"
2"
METAL STAIR AND RAIL SEE SH. 12
5/9 TYP.
MET. FRAMES (TYPICAL)
4'-10"
SEAWALL
10'-10"
2"
SEE NORTH ELEVATION FOR NORTH FACE OF NORTH WALL THIS SHEET.
2"×2" WEEP-HOLES TYPICAL EA. ELEMENT
FIN. GRADE AT SLAB
FIN. GRADE AT CURB SEE SH. #3
EAST WALL
NORTH WALL
ET ES ER EQ EP EO EN EM EL EK EJ EI EH EG EF EE ED EC EB A NB NC ND

EAST ELEVATION
SCALE: 1/4" = 1'-0"

EAST FACE OF EAST WALL
PRECAST CONCRETE SCULPTURE

EMBARCADERO PLAZA
EMBARCADERO LOWER MARKET APPROVED REDEVELOPMENT PROJECT AREA E1

SCULPTURE ELEVATIONS

SAN FRANCISCO REDEVELOPMENT AGENCY IN COOPERATION
WITH THE SAN FRANCISCO RECREATION AND PARK DEPARTMENT
AND SAN FRANCISCO DEPARTMENT OF PUBLIC WORKS

JOINT VENTURE ARCHITECTS:
LAWRENCE HALPRIN & ASSOCIATES Lawrence Halprin
JOHN S. BOLLES ASSOCIATES
MARIO J. CIAMPI & ASSOCIATES Mario J. Ciampi

SCALE: 1/4" = 1'-0"
DATE: JAN. 25, 1969
DRAWN BY: H.N.

X 8

SHEET 8 OF 12

SCULPTURE POOL
BOT. OF POOL EL. -5.844'
FOR ISOMETRICS OF SCULPTURE ELEMENTS SEE SHEET 10
19 CONC. ELEMENTS @ 4'-6 AND 17 SPACES @ 2" = 84'-8
17 CONC. ELEMENTS @ 4'-6 AND 17 SPACES @ 2" = 79'-4
16 TREADS @ 9" 12'-0"
UP 17 R.
MET. GRAT'G
LINEAR POOL
POOL OVERFLOW
OVERFLOW
BRONZE ENDS
SCULPTURE ELEMENTS (TYPICAL)
PRECAST TIE-BEAM (TYPICAL)
SCORING 3/16 DEEP (TYPICAL)
PEDESTALS (TYP.)
PRECAST CONC. SCULPTURE
METAL RAILING
MASONRY PAVING
POOL COPING
RUNNING BOND
RUNNING BOND SEE SHEET 6 FOR EXTENT OF PAVING PATTERN
RUNNING BOND PAVING PATTERN
DOUBLE SOLDIER COURSE TYPICAL
EQUAL
EXP. JT.
EXP. JOINT SEALANT
CONST. JT.
SEAWALL
T.W. +0.156
PROPERTY LINE
CONCRETE SLAB
LOUVERED AIR INTAKE UNITS
ACCESS UNIT
AIR INTAKE
REMOVABLE SLAB
BRASS TOP SEE DETAIL
PARALLEL TO EE
SIMILAR
+0.156
-0.344
-2.844
-2.804
-1.844
-1.344
12.388'
41.0'
20.0'
60.0'
6.0'
42.0'
66.5'
13'-9
4'-0"
3'-0"
4'-6"

EMBARCADERO PLAZA

EMBARCADERO LOWER MARKET APPROVED REDEVELOPMENT PROJECT AREA E1

SCALE: 1/4" = 1'-0"
DATE: JAN. 25, 1969
DRAWN BY: W.H. H.N.

FOUNTAIN PLAN

SAN FRANCISCO REDEVELOPMENT AGENCY IN COOPERATION
WITH THE SAN FRANCISCO RECREATION AND PARK DEPARTMENT
AND SAN FRANCISCO DEPARTMENT OF PUBLIC WORKS

JOINT VENTURE ARCHITECTS:
LAWRENCE HALPRIN & ASSOCIATES Lawrence Halprin
JOHN S. BOLLES ASSOCIATES
MARIO J. CIAMPI & ASSOCIATES

7

SHEET 7 OF 12

41.0'
12.398'
20.0'
60.0'
8.0'
LINE OF CONC. ABOVE
26'-0"
84'-6"
26'-0"
20'-0"
12'-6"
3'-0"
LINEAR POOL ABOVE
PEDESTAL BASE (TYPICAL)
LINE OF CONC. ABOVE ?
℄ TYPICAL
1'-4 3'-4 TYP.
STEEL PLATE
GAS METER
MECHANICAL VAULT
FIN. FL. EL. -10.177
LOUVERED VENTS ABOVE
ACCESS UNIT
LADDER
LOUVERED VENT UNITS ABOVE
14'-0" MECHANICAL STEP
SEE P.G.&E. SUMP PITS
SCULPTURE POOL
INTEGRAL COLOR CONC. TOPPING
EL. -5.844' AT HIGH POINT
SLOPE 3" TO DRAIN
4'-6
5'-0"
5'-0"
41'-6
SLOPE 3" TO DRAIN
P.G.&E. VAULT
300 KVA
POOL ABOVE
PROPERTY LINE
LINE OF CONC. ABOVE ?
LINE OF CONC. ABOVE ?
LINE OF CONC. ABOVE
4'-0
13'-0
80.0'
51.4'
7.0'
42.0'
66.5'
17.5'
22.5'
17.0'
5'-0"
5'-0"
4'-6
OVERFLOW STAND-PIPE SEE DETAIL
SLOPE 3" TO DRAIN

EMBARCADERO PLAZA

EMBARCADERO LOWER MARKET APPROVED REDEVELOPMENT PROJECT AREA E1

POOL PLAN

SAN FRANCISCO REDEVELOPMENT AGENCY IN COOPERATION
WITH THE SAN FRANCISCO RECREATION AND PARK DEPARTMENT
AND SAN FRANCISCO DEPARTMENT OF PUBLIC WORKS

JOINT VENTURE ARCHITECTS: Lawrence Halprin
LAWRENCE HALPRIN & ASSOCIATES
JOHN S. BOLLES ASSOCIATES
MARIO J. CIAMPI & ASSOCIATES Mario J. Ciampi

SCALE: 1/4" = 1'-0"
DATE: JAN. 25, 1969
DRAWN BY: W.H.

6

SHEET 6 OF 12

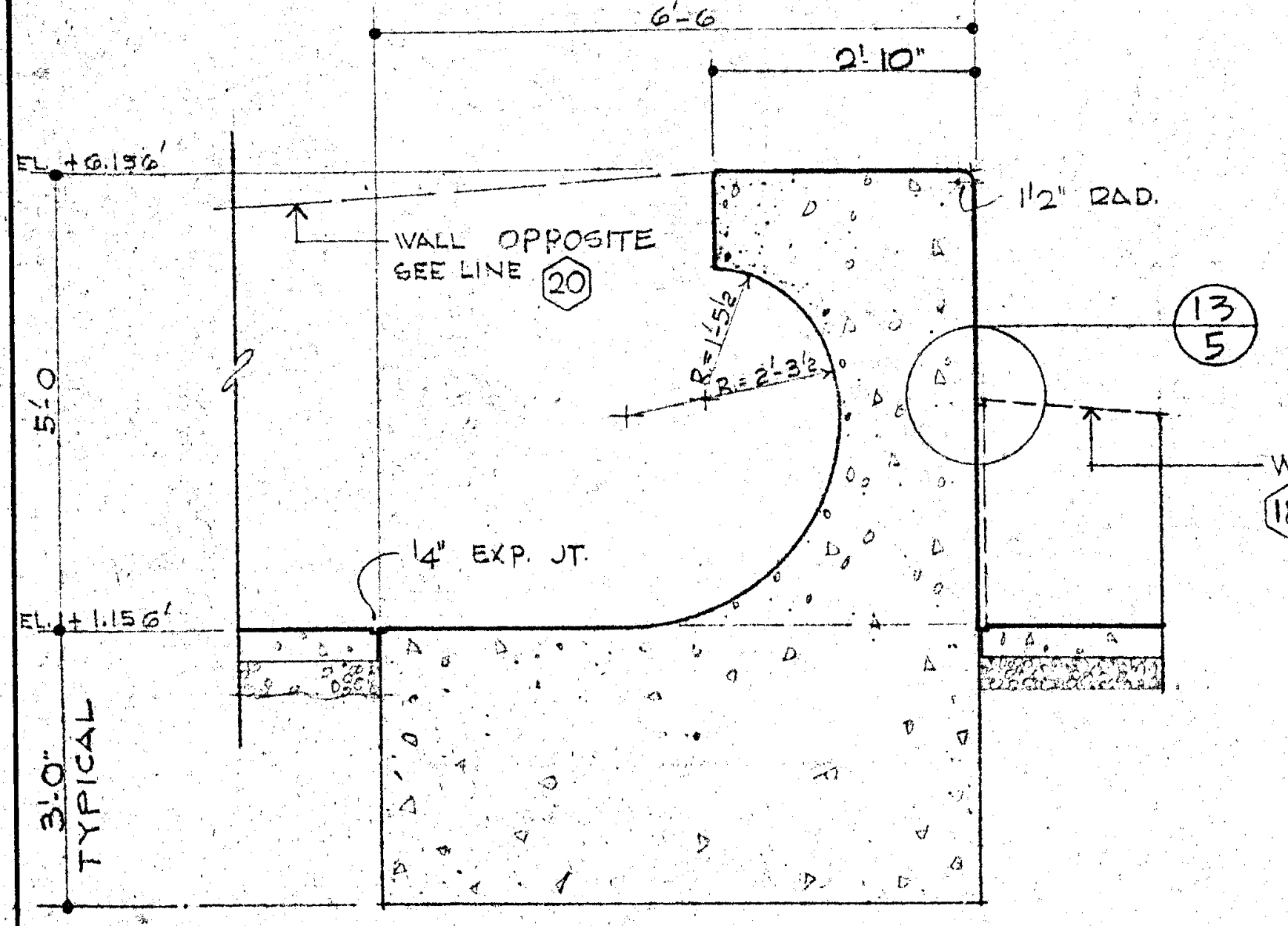
6'-6"
2'-10"
EL. +8.156'
WALL OPPOSITE SEE LINE 20
1 1/2" RAD.
13/5
WALL LINE 18 19
1/4" EXP. JT.
EL. +1.156'
5'-0"
3'-0" TYPICAL

1/5 SEAWALL SECTION 1/2"=1'-0"
AT CONCRETE PAVING

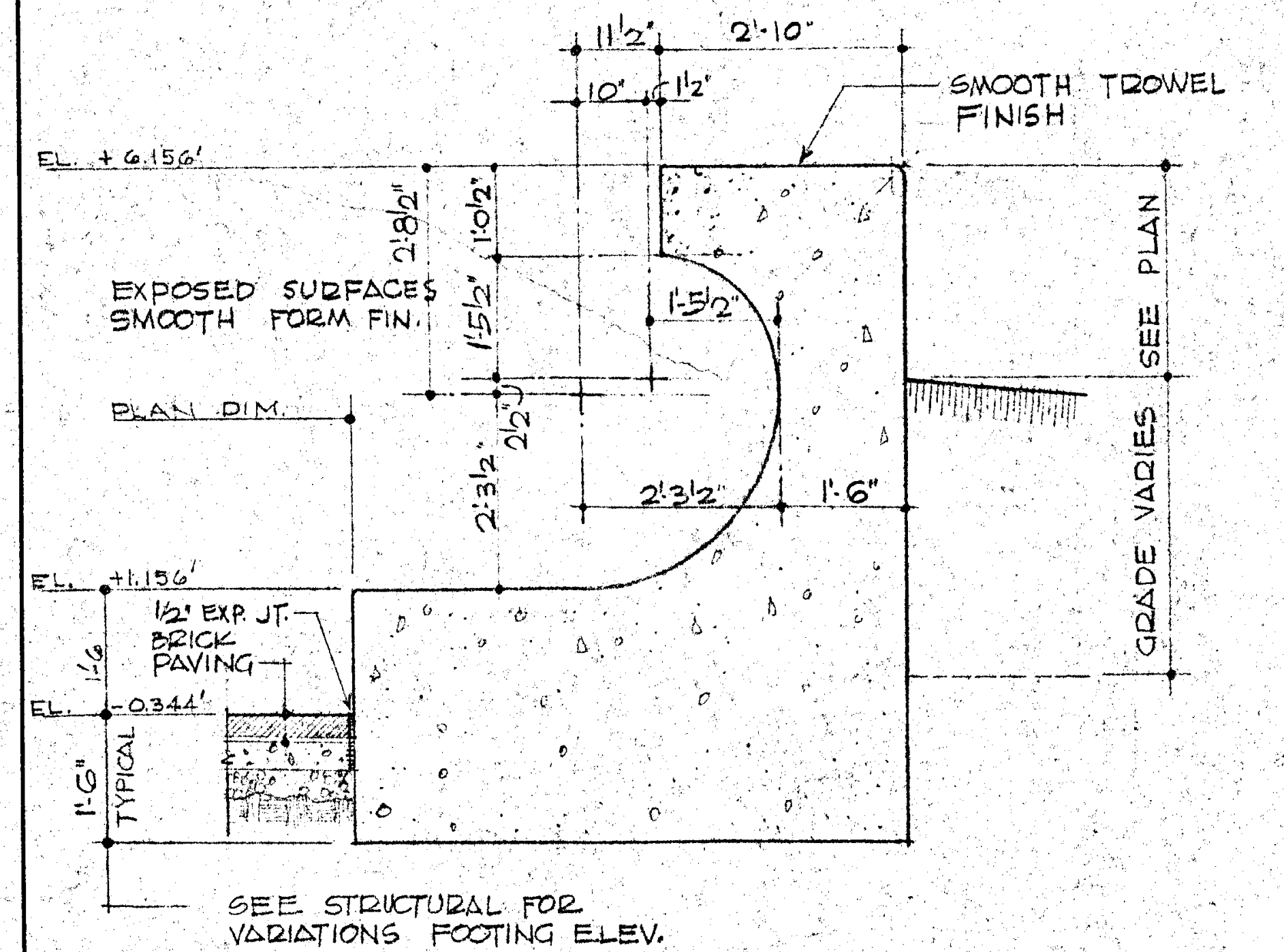
1 1/2" 2'-10"
10" 1 1/2"
SMOOTH TROWEL FINISH
EL. +8.156'
EXPOSED SURFACES SMOOTH FORM FIN.
PLAN DIM.
GRADE VARIES SEE PLAN
1'-6"
EL. +1.156'
1/2" EXP. JT.
BRICK PAVING
EL. +0.344'
1'-6" TYPICAL

SEE STRUCTURAL FOR VARIATIONS FOOTING ELEV.

2/5 SEAWALL SECTION 1/2"=1'-0"
TYPICAL AT MASONRY PAVING

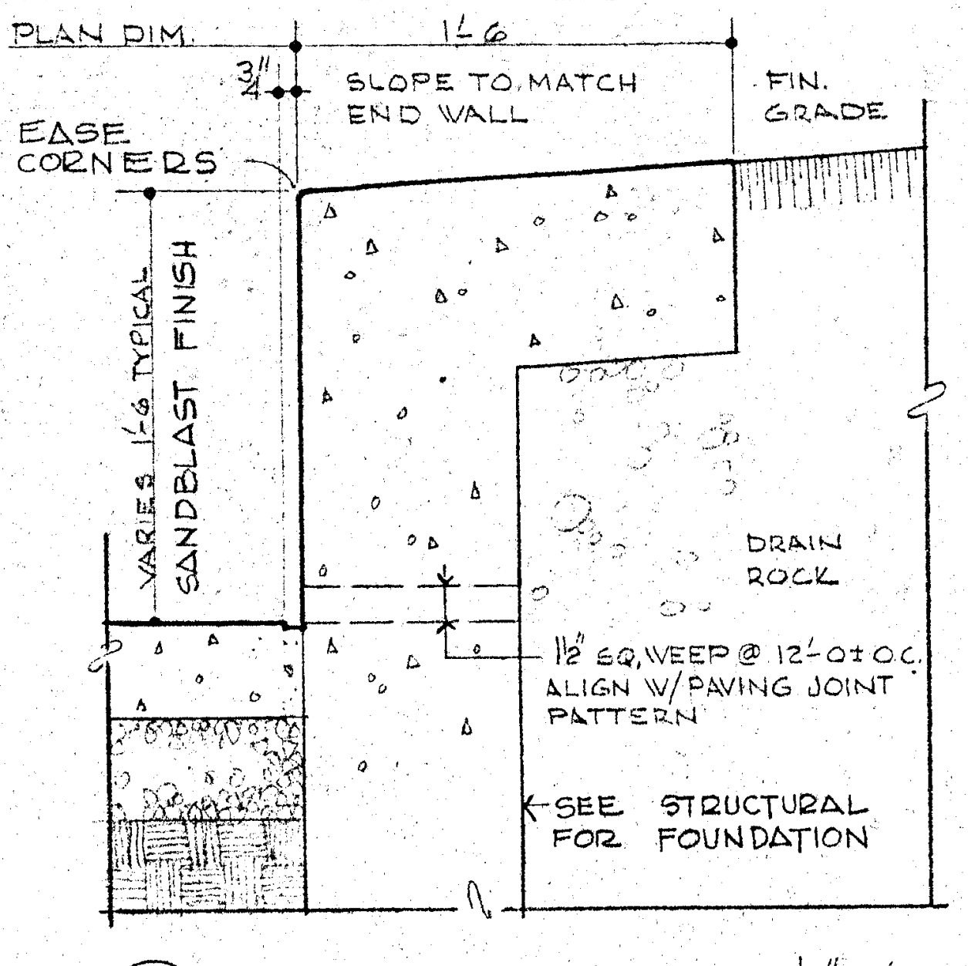
PLAN DIM. 1'-6"
SLOPE TO MATCH END WALL
FIN. GRADE
EASE CORNERS
VARIES 1'-6 TYPICAL
SANDBLAST FINISH
DRAIN ROCK
1 1/2" SQ. WEEP @ 12'-0" O.C. ALIGN W/PAVING JOINT PATTERN
SEE STRUCTURAL FOR FOUNDATION

8/5 WALL SECTION 1/2"=1'-0"

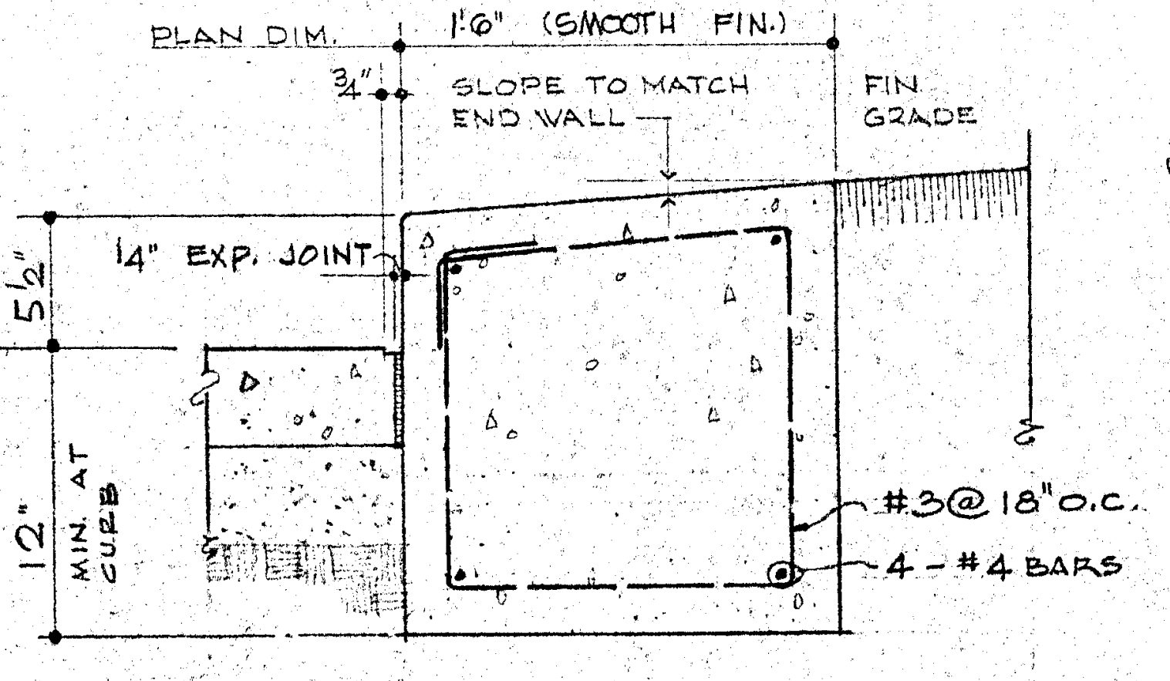
1'-6" (SMOOTH FIN.)
PLAN DIM.
SLOPE TO MATCH END WALL
FIN. GRADE
1/4" EXP. JOINT
12" MIN. AT CURB
#3 @ 18" O.C.
4-#4 BARS

19/5 CURB SECTION 1/2"=1'-0"

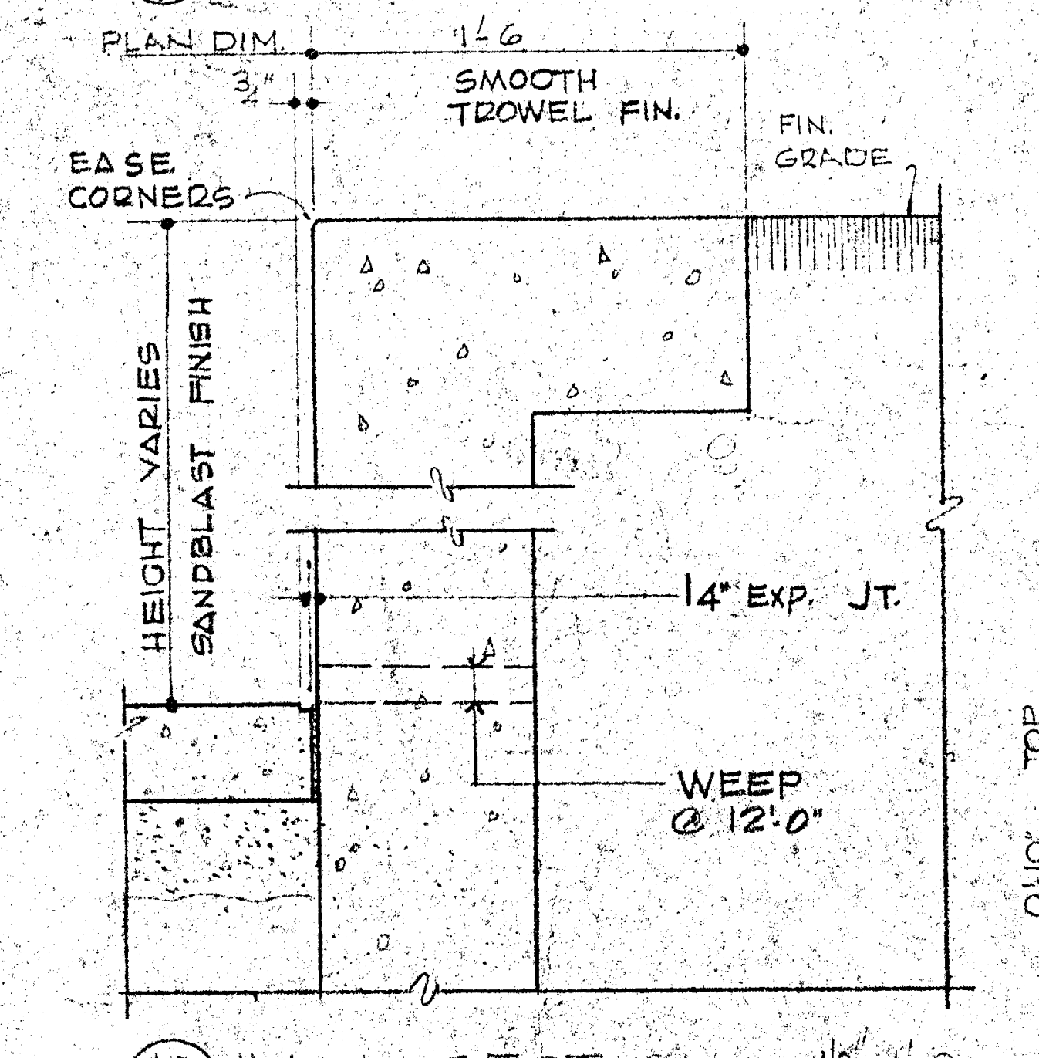
PLAN DIM. 1'-6
SMOOTH TROWEL FIN.
FIN. GRADE
EASE CORNERS
HEIGHT VARIES
SANDBLAST FINISH
1/4" EXP. JT.
WEEP @ 12'-0"

10/5 WALL SECTION 1/2"=1'-0"

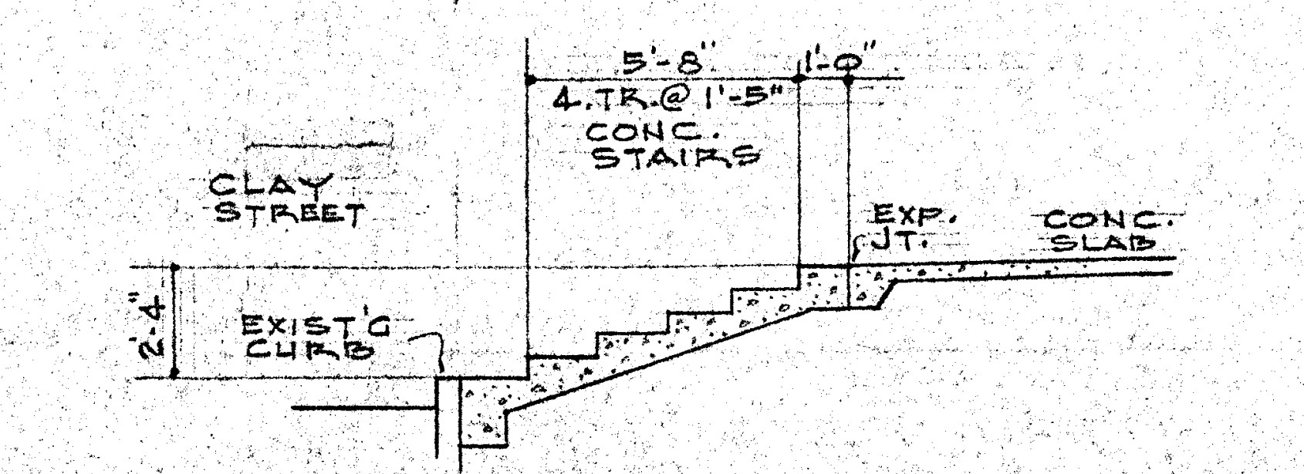
5'-8"
1'-0"
4-TR.@ 1'-5"
CONC. STAIRS
CLAY STREET
EXP. JT.
CONC. SLAB
2'-4
EXIST'G CURB

4/5 SECT. TEMPORARY STAIRS
SCALE: 1/4"=1'-0"

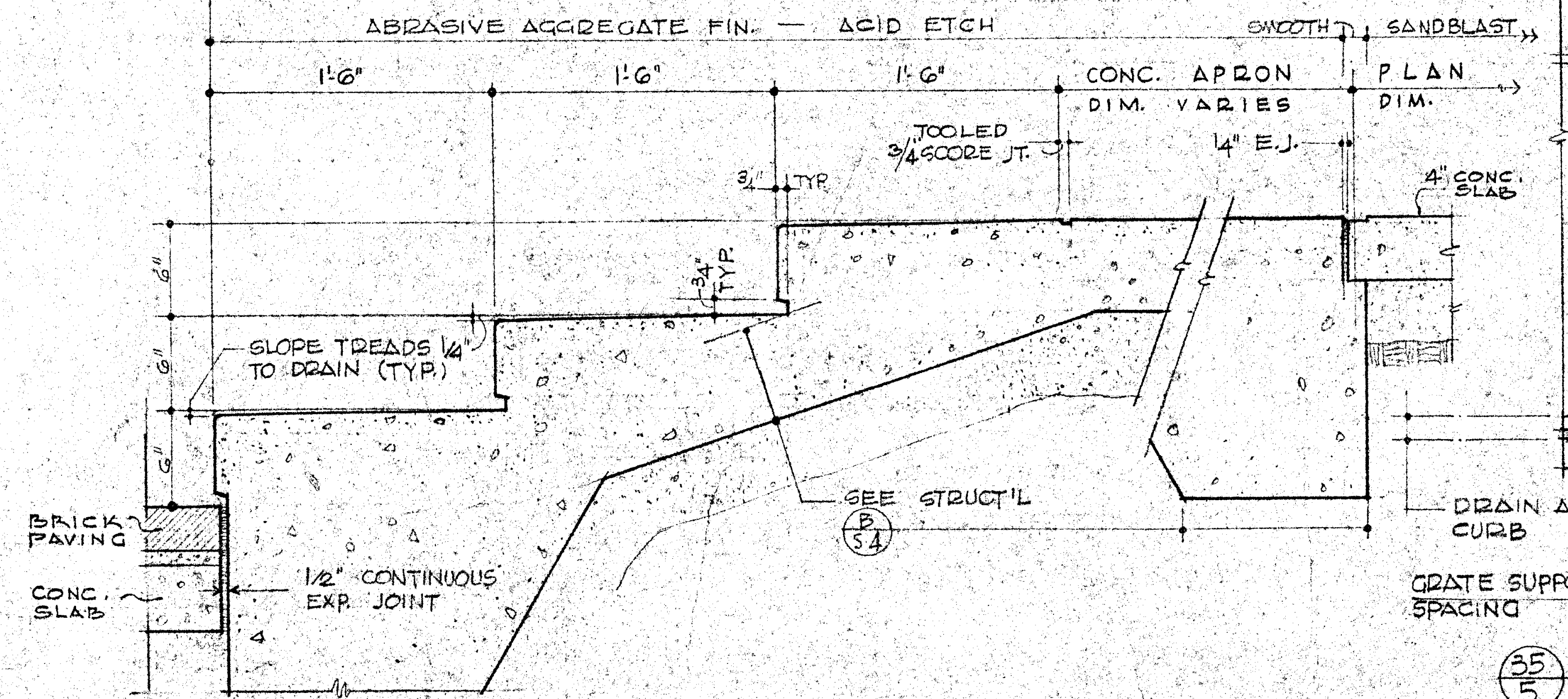
ABRASIVE AGGREGATE FIN. — ACID ETCH
SMOOTH
SANDBLAST
1'-6"
1'-6"
1'-6"
CONC. APRON DIM. VARIES
PLAN DIM.
TOOLED 3/4 SCORE JT.
1/4" E.J.
4" CONC. SLAB
SLOPE TREADS 1/4" TO DRAIN (TYP.)
SEE STRUCT'L 5/S4
BRICK PAVING
CONC. SLAB
1/2" CONTINUOUS EXP. JOINT

12/5 STEPS SECTION 1/2"=1'-0"

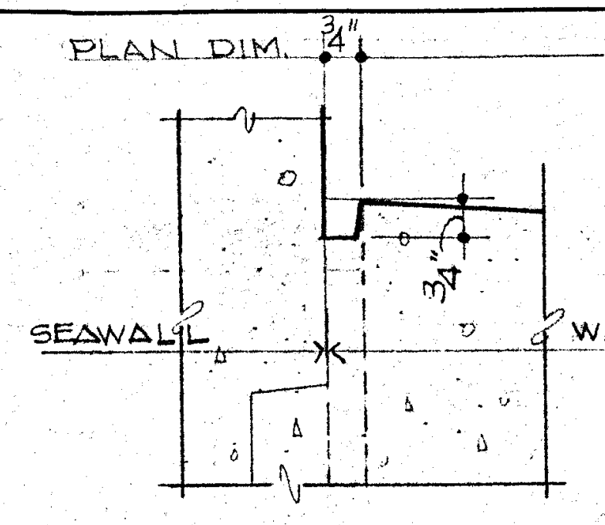
PLAN DIM.
SEAWALL
WALL

13/5 DETAIL
SEAWALL TO WALL

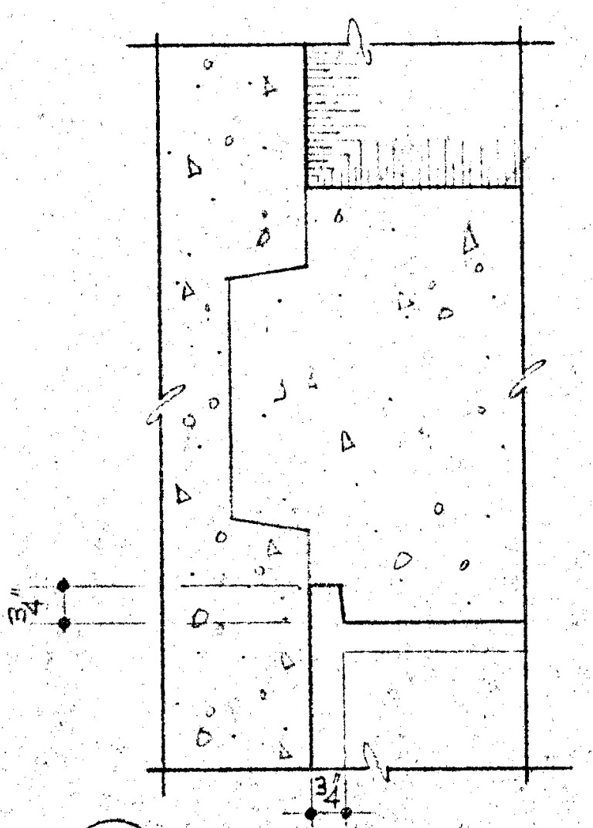

14/5 DETAIL
SEAWALL TO WALL

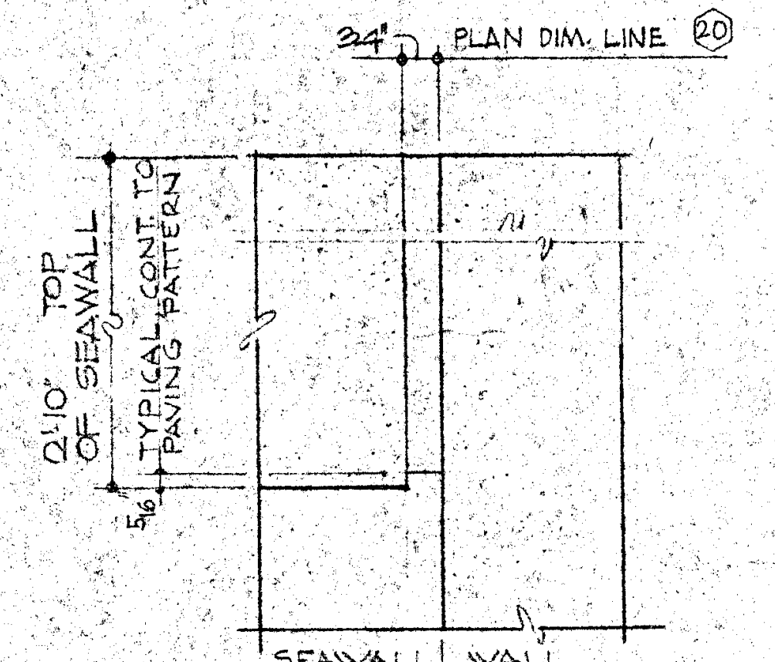
PLAN DIM. LINE 20
TOP OF SEAWALL
TYPICAL CONT. TO PAVING PATTERN
SEAWALL WALL

16/5 PLAN DETAIL
SEAWALL TO WALL

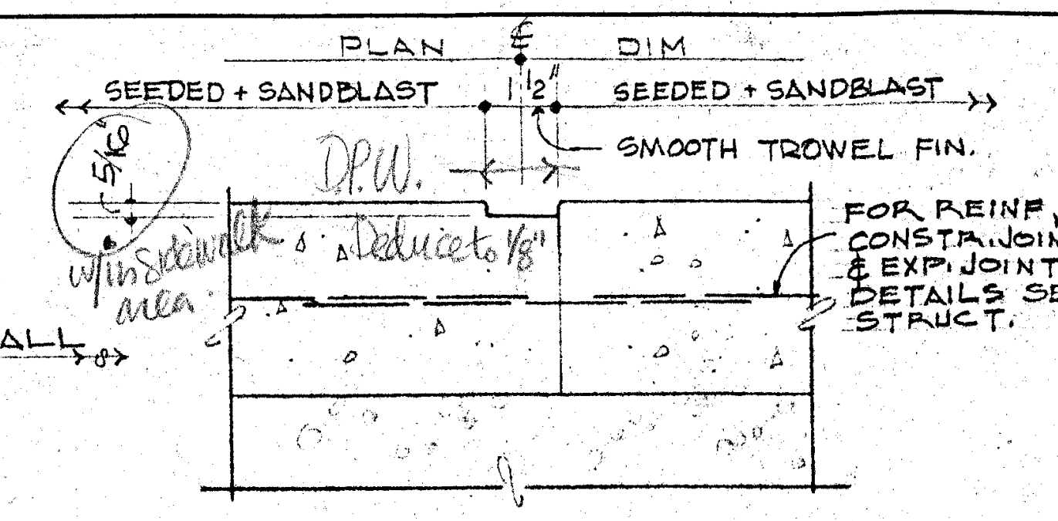
PLAN DIM.
SEEDED + SANDBLAST
SEEDED + SANDBLAST
SMOOTH TROWEL FIN.
FOR REINF. & CONSTR. JOINT & EXP. JOINT DETAILS SEE STRUCT.

18/5 CONCRETE PAVING DETAIL

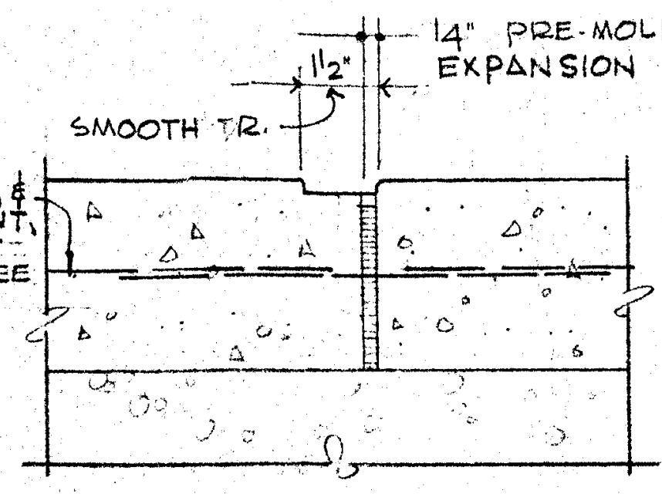
1/4" PRE-MOLDED EXPANSION JOINT
SMOOTH TR.

21/5 EXPANSION JOINT 3"=1'-0"

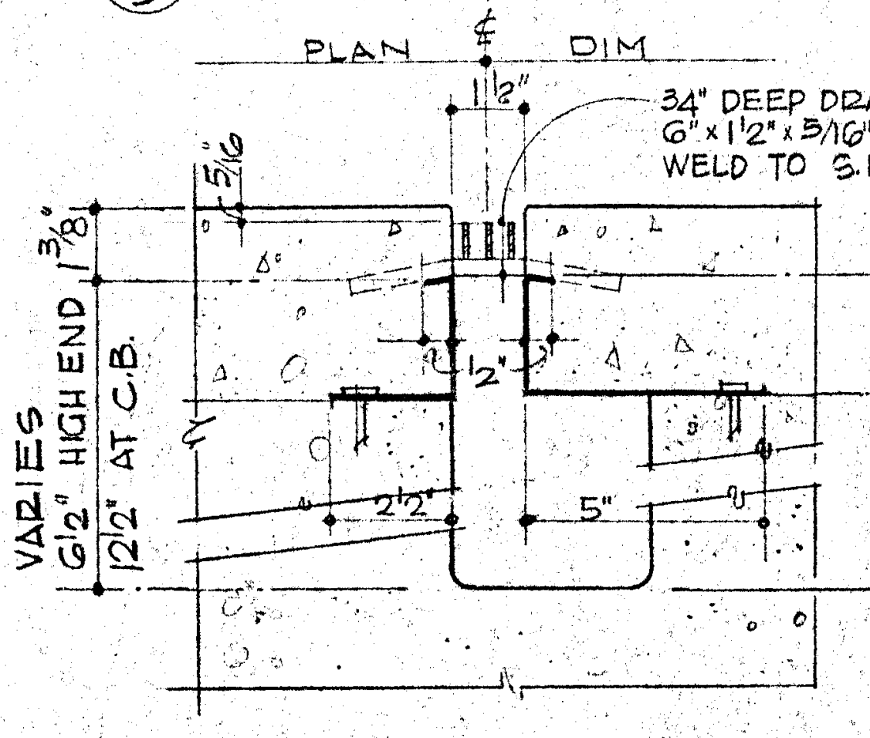
PLAN DIM.
3/4" DEEP DRAIN GRATING 6"x1/2"x3/16" F.B. SUPPORTS 2'-0" O.C. WELD TO S.M. CORNER FORM
VARIES 6 1/2" HIGH END 12 1/2" AT C.B.
CONC. GUTTER 4" HIGH END 10" AT C.B.
5"

19/5 DRAIN RIBBON TRENCH
3"=1'-0"
PAVING DIM.

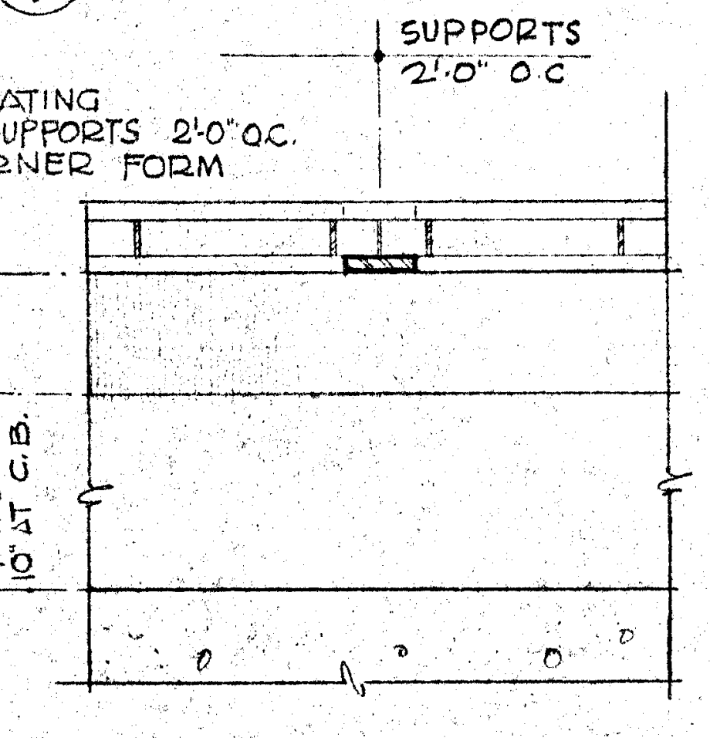
SUPPORTS 2'-0" O.C.

22/5 GRATING SUPPORT
THRU TROUGH 3"=1'-0"
PAVING DIM.

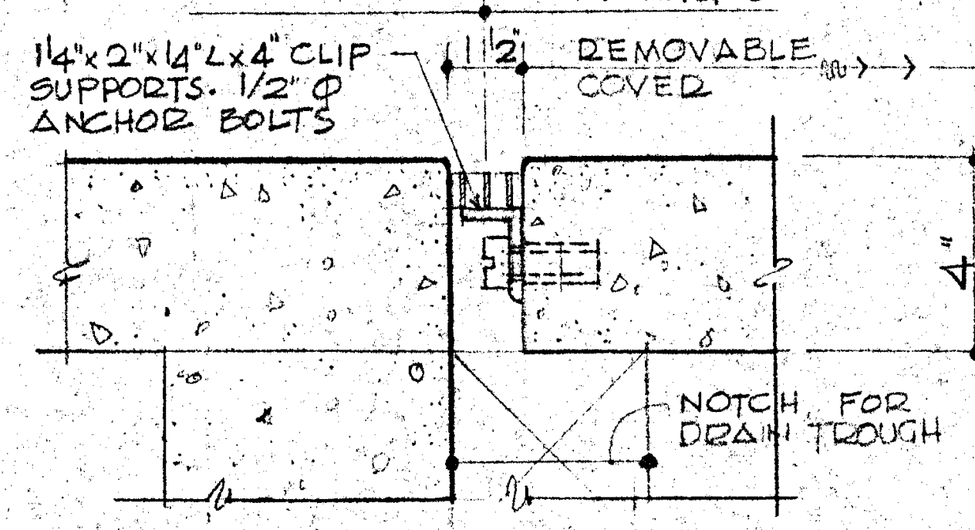
1/4"x2"x1/4"x4" CLIP SUPPORTS 1/2" Ø ANCHOR BOLTS
REMOVABLE COVER
NOTCH FOR DRAIN TROUGH

20/5 DRAIN AT CATCH BASIN
3"=1'-0"

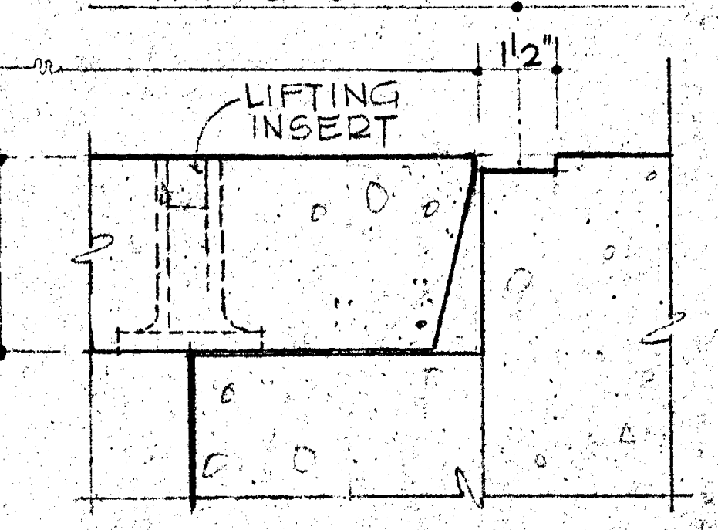
LIFTING INSERT

23/5 CATCH BASIN COVER
3"=1'-0"

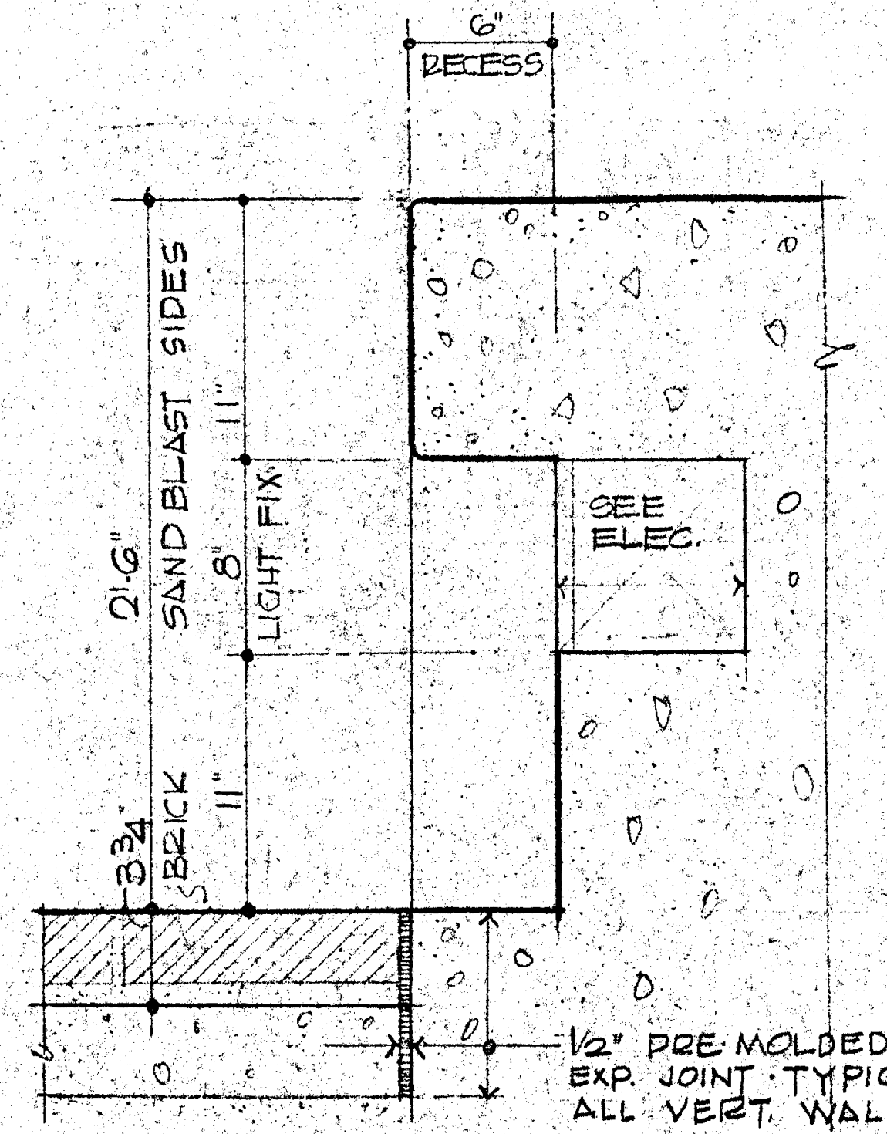
6"
RECESS
SAND BLAST SIDES
LIGHT FIX.
SEE ELEC.
BRICK
1/2" PRE-MOLDED EXP. JOINT TYPICAL ALL VERT. WALLS

24/5 LIGHT RECESS
1 1/2"=1'-0"

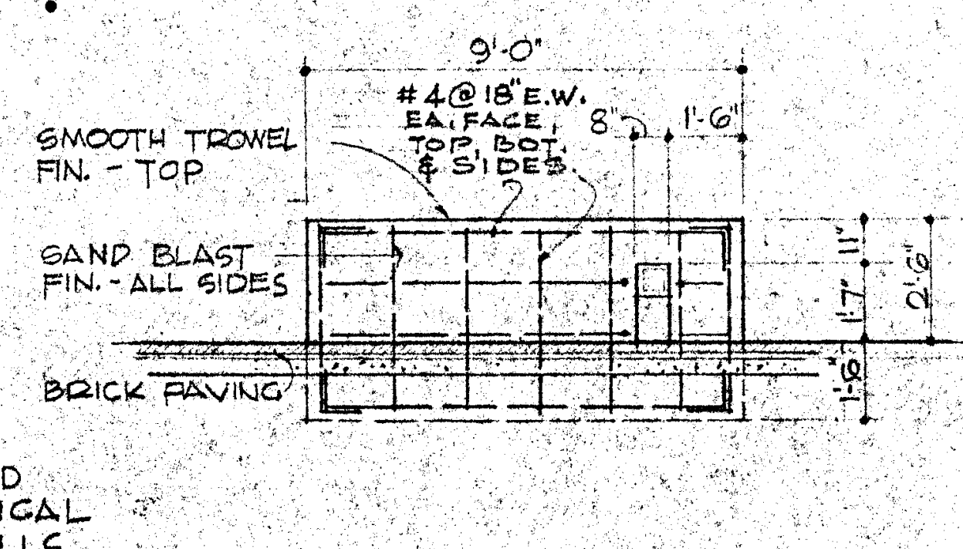
9'-0"
#4 @ 18 E.W. EA. FACE, TOP, BOT. & SIDES
SMOOTH TROWEL FIN. - TOP
SAND BLAST FIN. - ALL SIDES
BRICK PAVING

25/5 STATUE PED.
ELEVATION 1/4"=1'-0"

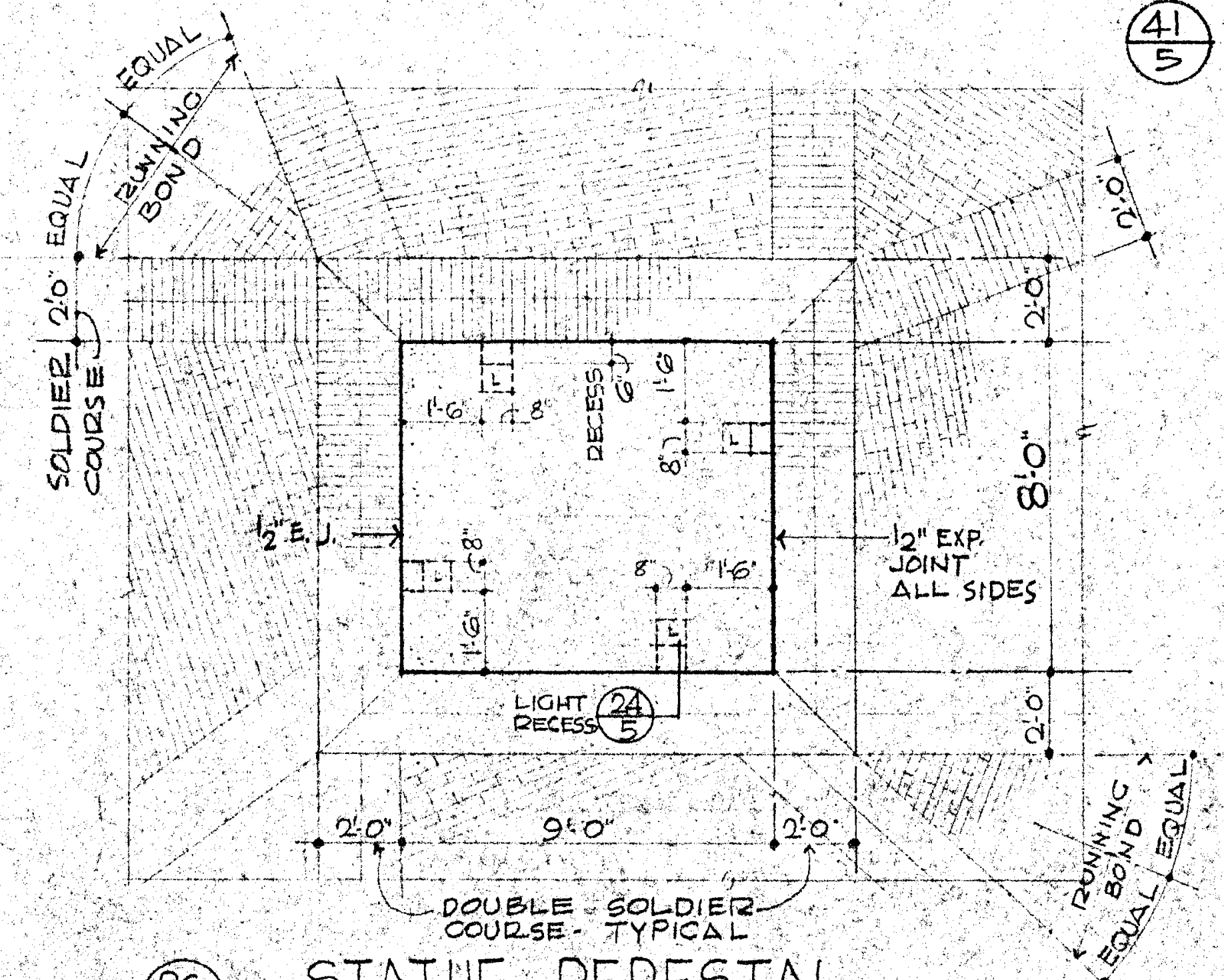
EQUAL
RUNNING BOND
SOLDIER COURSE
1/2" E.J.
1/2" EXP. JOINT ALL SIDES
LIGHT RECESS 24/5
2'-0"
9'-0"
8'-0"
DOUBLE - SOLDIER COURSE - TYPICAL
RUNNING BOND
EQUAL

26/5 STATUE PEDESTAL
PLAN 1/4"=1'-0"

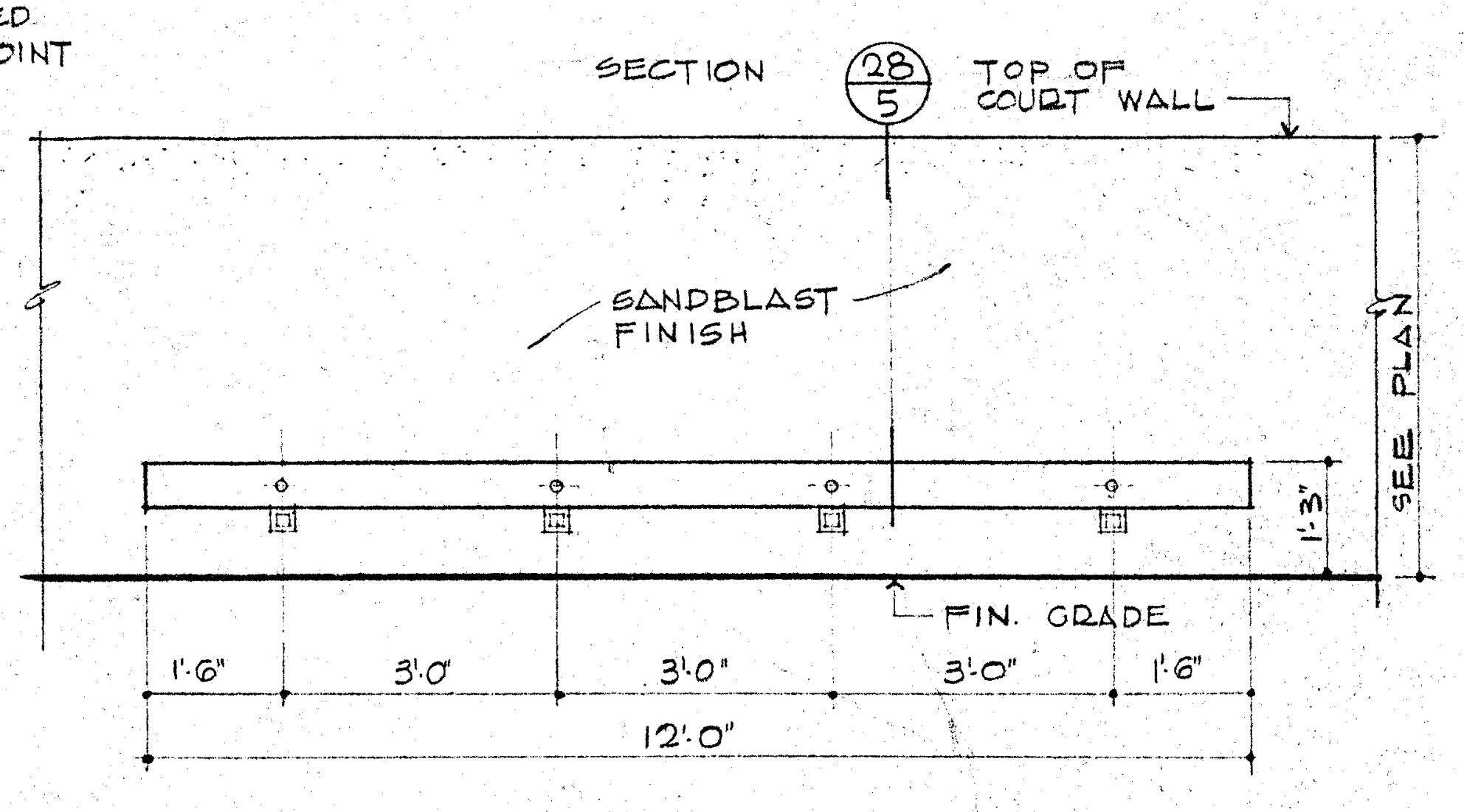
SECTION 28/5 TOP OF COURT WALL
SANDBLAST FINISH
SEE PLAN
FIN. GRADE
1'-6" 3'-0" 3'-0" 3'-0" 1'-6"
12'-0"

27/5 ELEVATION COURT BENCH
1/2"=1'-0"

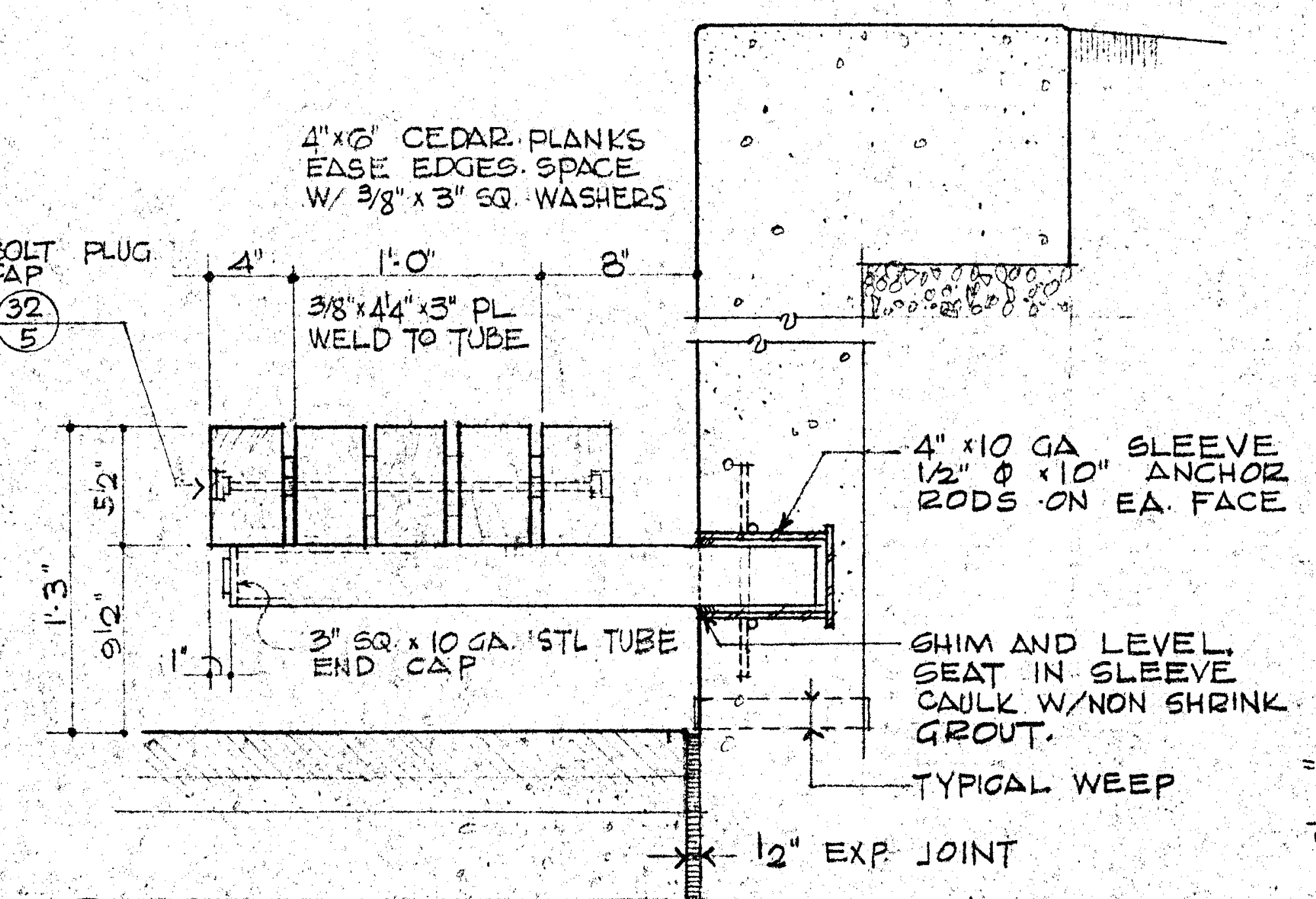
4"x6" CEDAR PLANKS EASE EDGES SPACE W/ 3/8"x3" SQ. WASHERS
BOLT PLUG CAP 32/5
3/8"x1/4"x5" PL WELD TO TUBE
3" SQ. x 10 GA. STL TUBE END CAP
4"x10 GA SLEEVE 1/2" Ø x10" ANCHOR RODS ON EA. FACE
SHIM AND LEVEL SEAT IN SLEEVE CAULK W/NON SHRINK GROUT
TYPICAL WEEP
1/2" EXP. JOINT

28/5 SECTION · COURT BENCH 1 1/2"=1'-0"

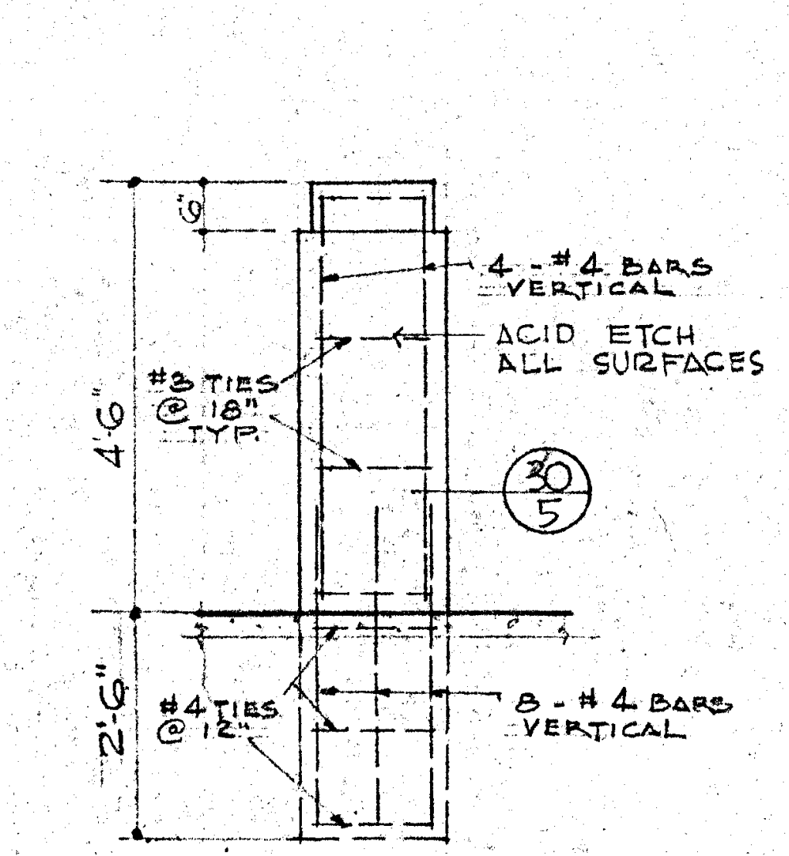
4-#4 BARS VERTICAL
ACID ETCH ALL SURFACES
#3 TIES @ 18" TYP.
30/5
#3 TIES @ 12"
8-#4 BARS VERTICAL

29/5 BOLLARD
ELEV. 1/2"=1'-0"

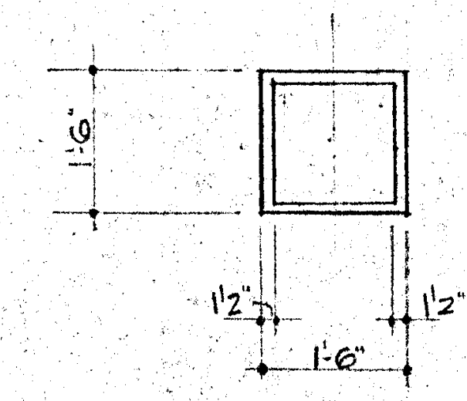

30/5 BOLLARD
PLAN 1/2"=1'-0"

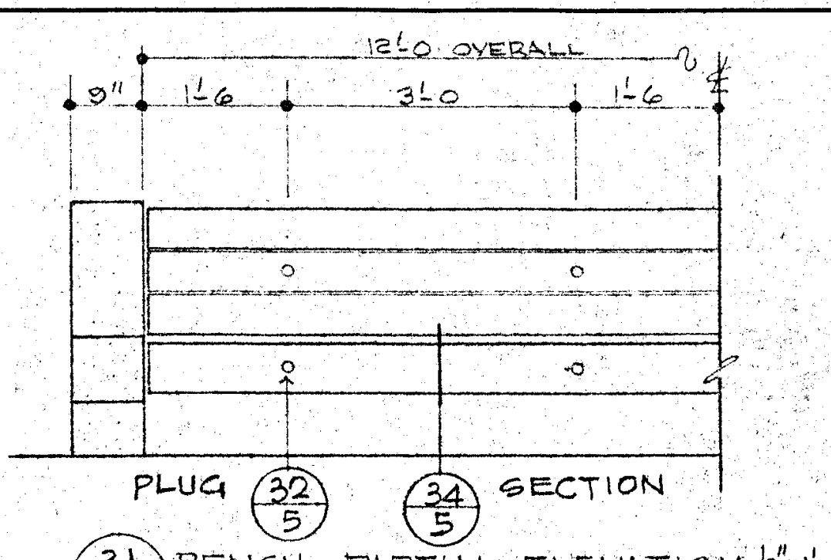
18'-0 OVERALL
PLUG 32/5
34/5 SECTION

31/5 BENCH - PARTIAL ELEVATION 1/2"=1'-0"

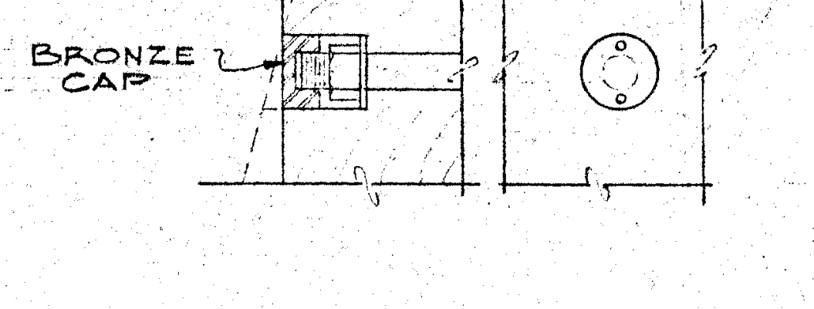

32/5 BOLT PLUG-CAP DETAIL 3"=1'-0"
TYPICAL CAP EXPOSED TO DIRECT VIEW.

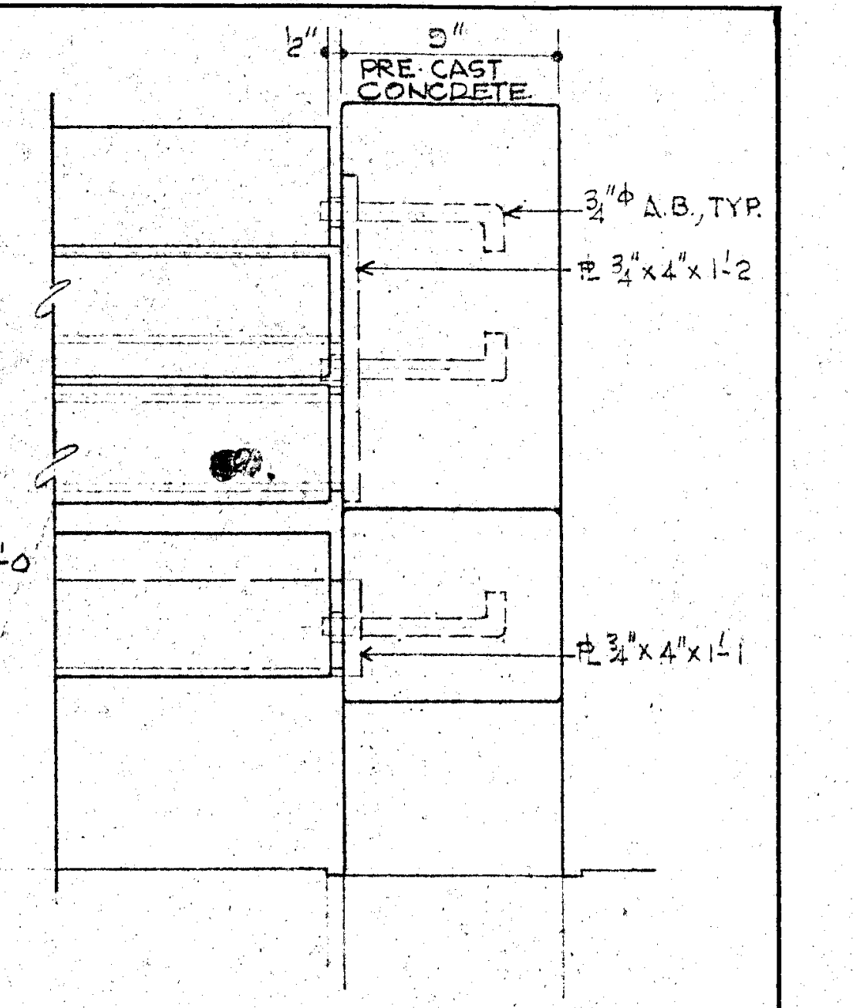
PRE-CAST CONCRETE

33/5 BENCH - END DETAIL 1 1/2"=1'-0"

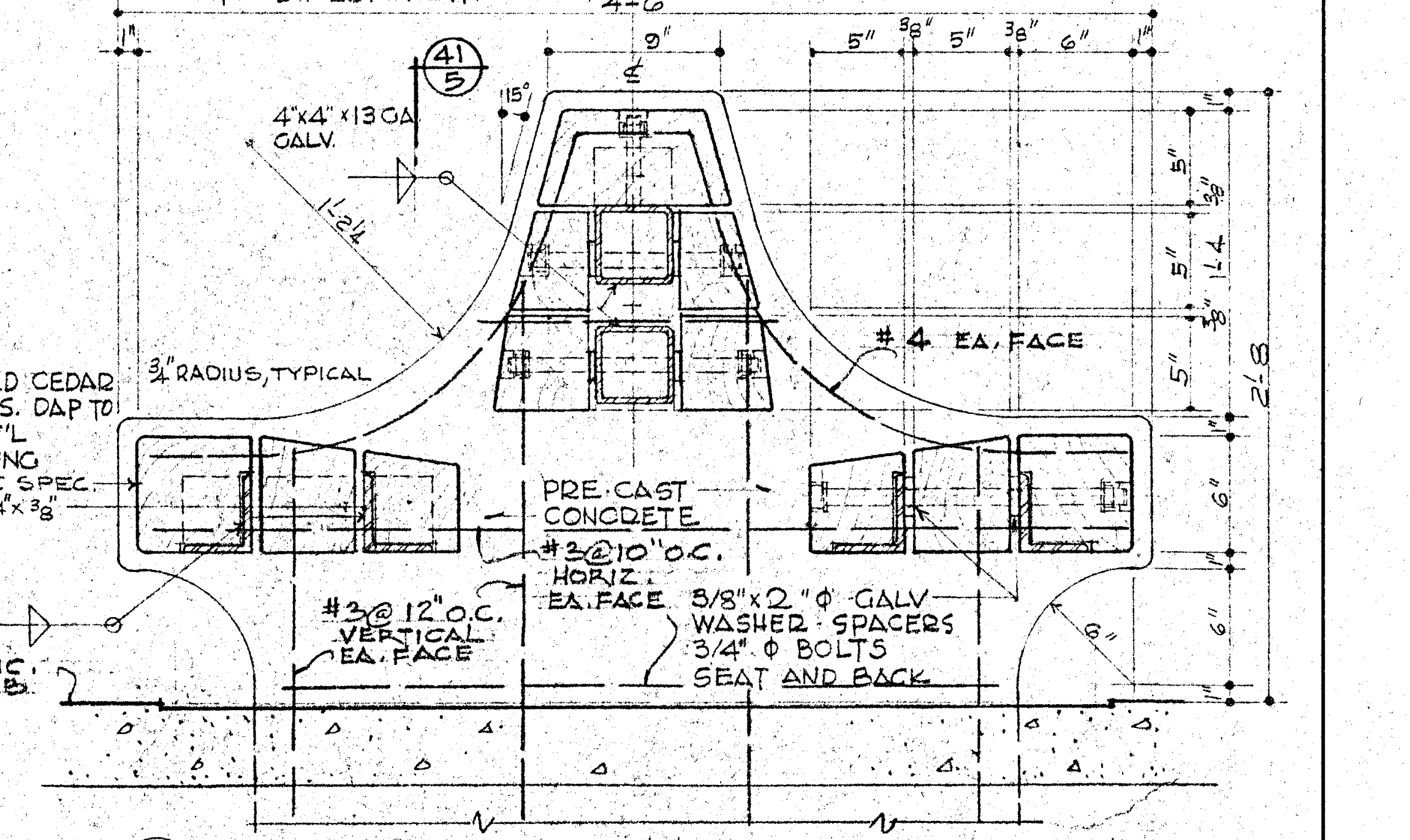
4'-6
41/5
4"x4"x13 GA GALV.
3" RADIUS, TYPICAL
SHAPED CEDAR PLANKS, DAP TO FIT ST'L FRAMING SEE SPEC.
PRE-CAST CONCRETE
#4 EA. FACE
#3 @ 10" O.C. HORIZ. EA. FACE
#3 @ 12" O.C. VERTICAL EA. FACE
5/8"x2" Ø GALV. WASHER SPACERS
3/4" Ø BOLTS SEAT AND BACK
CONC. SLAB

34/5 BENCH SECTION 1 1/2"=1'-0"

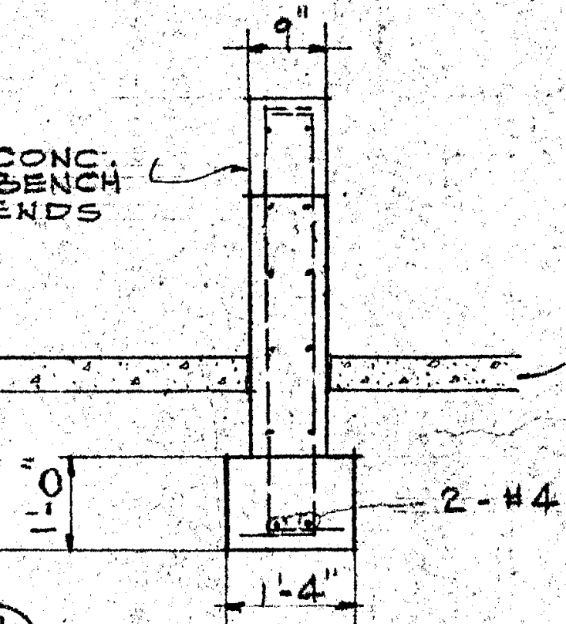
CONC. BENCH ENDS
2-#4
1'-4"

41/5 SECTION THRU BENCH END
SCALE: 1/2"=1'-0"

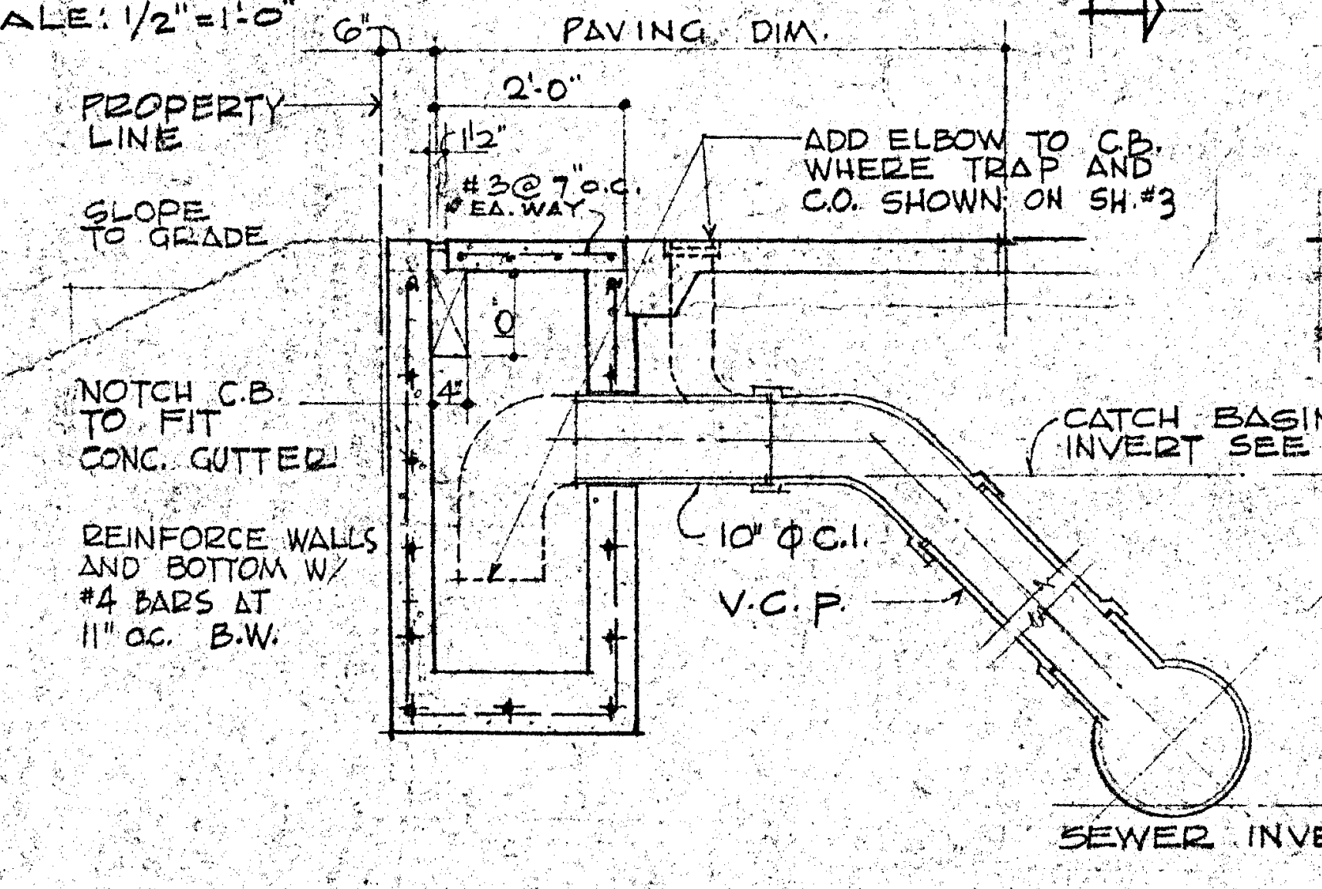
PAVING DIM.
PROPERTY LINE
SLOPE TO GRADE
NOTCH C.B. TO FIT CONC. GUTTER
REINFORCE WALLS AND BOTTOM W/ #4 BARS AT 11" OC. B.W.
#3 @ 7" O.C. EA. WAY
ADD ELBOW TO C.B. WHERE TRAP AND C.O. SHOWN ON SH. #3
CATCH BASIN INVERT SEE SH. #3
10" Ø C.I.
V.C.P.
SEWER INVERT

38/5 P.L. CATCH BASIN 1/2"=1'-0"

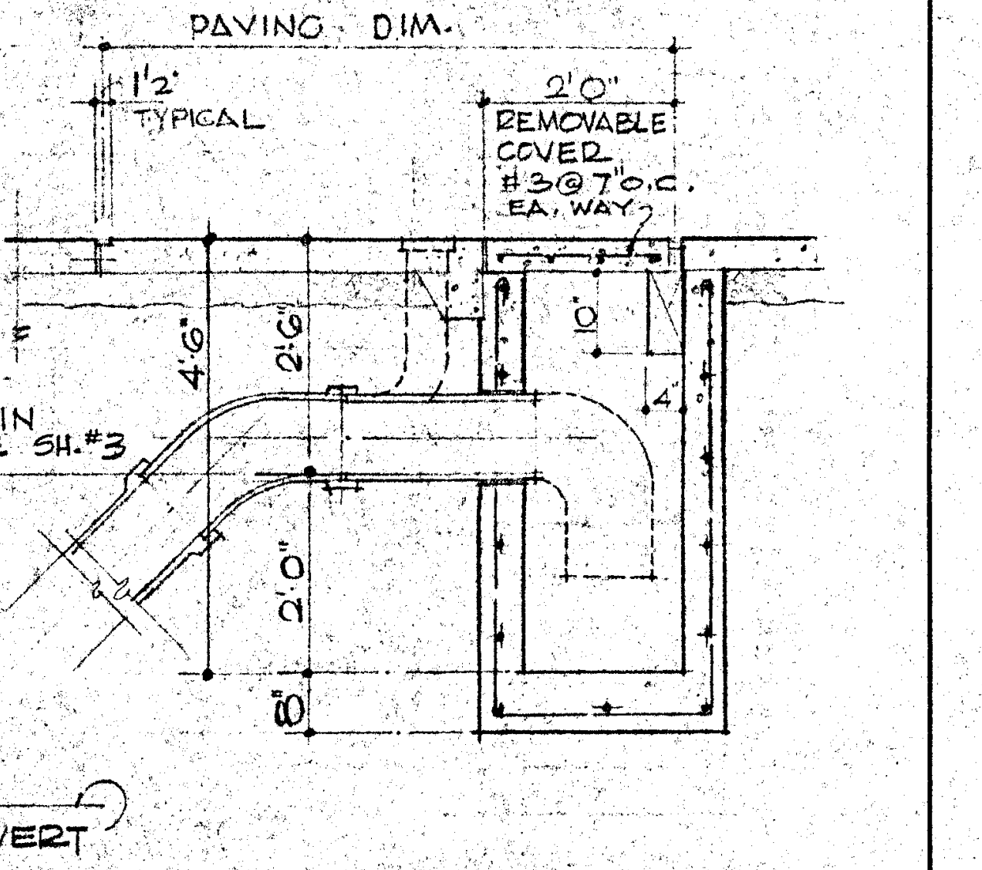
PAVING DIM.
2'-0"
REMOVABLE COVER
#3 @ 7" O.C. EA. WAY
1'-2" TYPICAL

39/5 PLAZA C.B. 1/2"=1'-0"

NOTE:
FOR ALL REINF. STEEL IN CONCRETE NOT INDICATED ON DETAILS, THIS SHEET, SEE STRUCTURAL DRAWINGS.

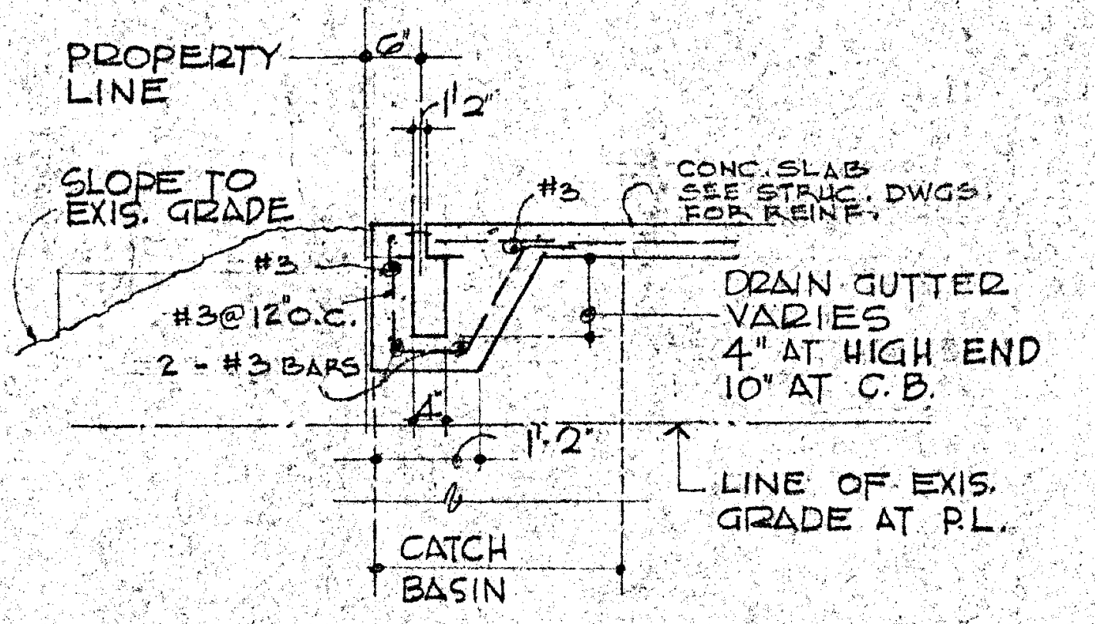
PROPERTY LINE
SLOPE TO EXIS. GRADE
CONC. SLAB SEE STRUC. DWGS. FOR REINF.
#3 @ 12" O.C.
2-#3 BARS
DRAIN GUTTER VARIES 4" AT HIGH END 10" AT C.B.
LINE OF EXIS. GRADE AT P.L.
CATCH BASIN

40/5 P.L. GUTTER
12"=1'-0"

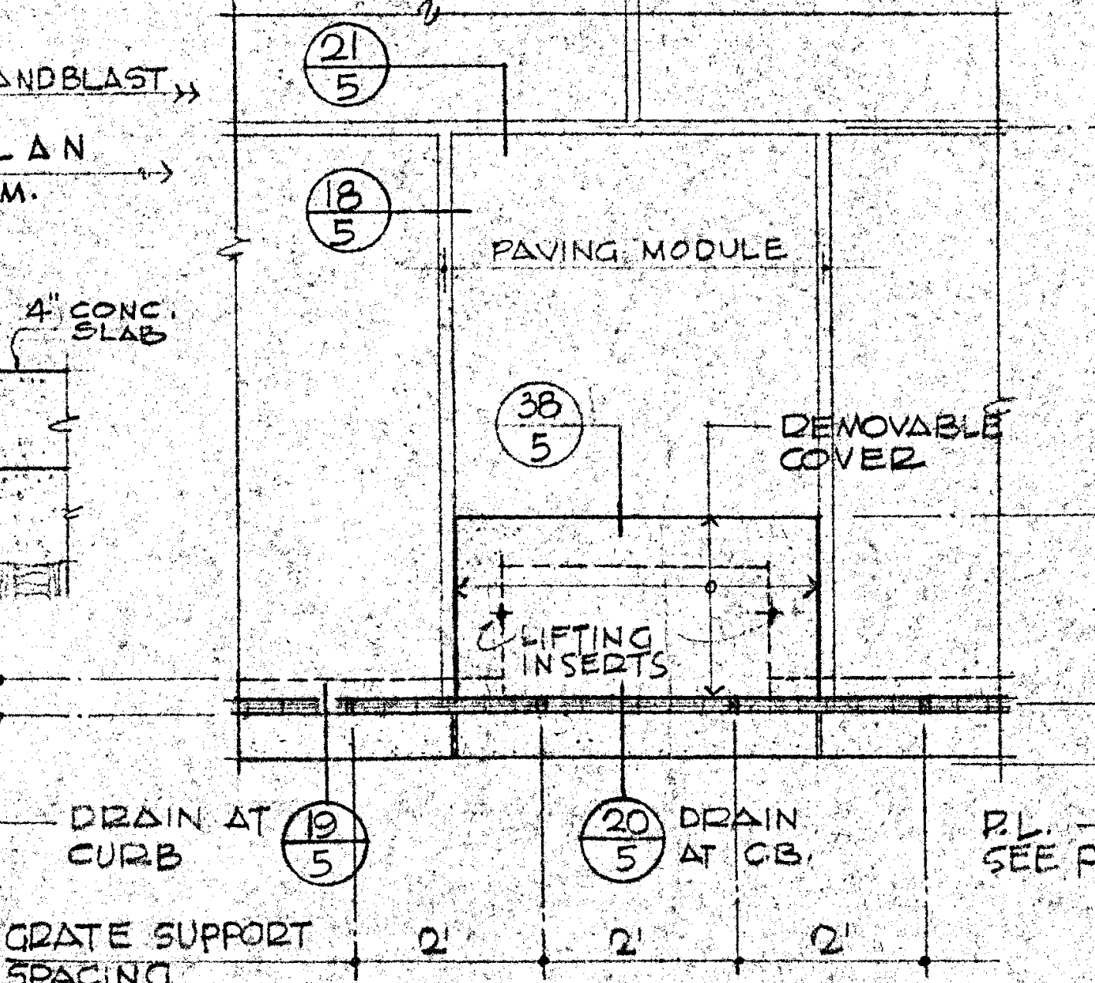
21/5
16/5
PAVING MODULE
38/5
REMOVABLE COVER
LIFTING INSERTS
6'-0" PAVING MODULE
DRAIN AT CURB 19/5
20/5 DRAIN AT C.B.
P.L. SEE PLAN
GRATE SUPPORT SPACING

35/5 PLAN · C.B. AT PROP.
1/2"=1'-0"

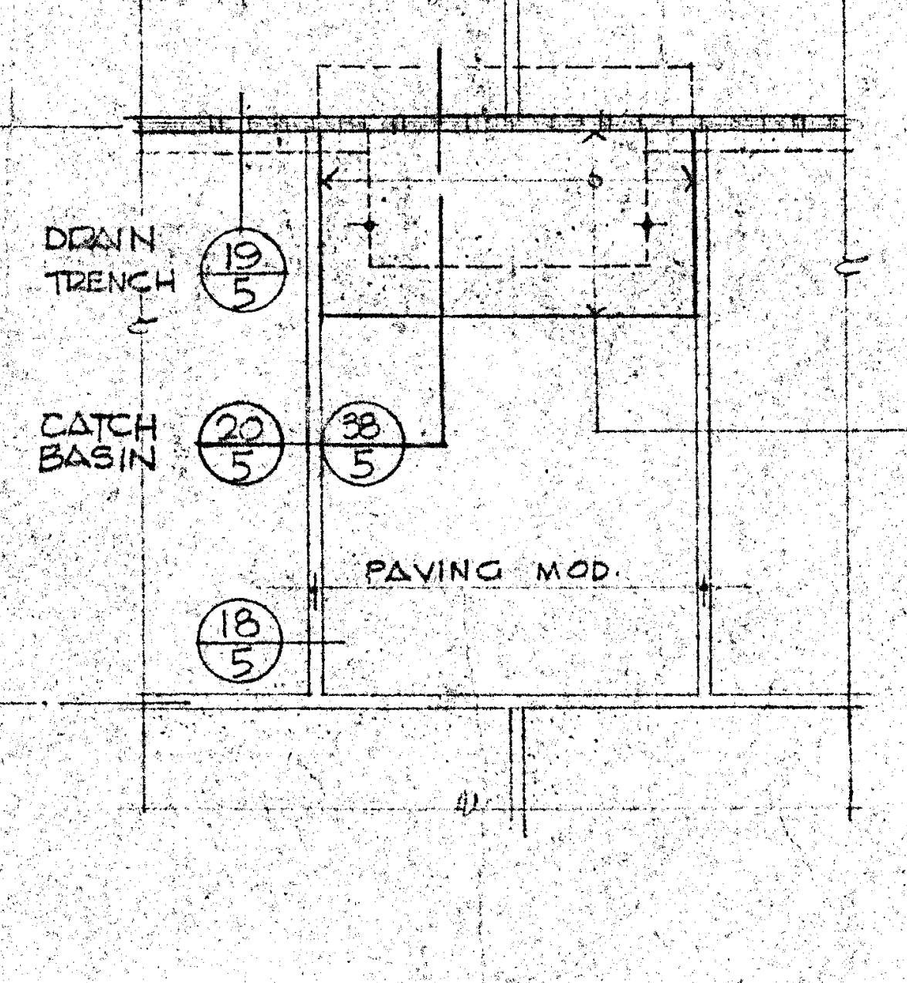
DRAIN TRENCH 19/5
CATCH BASIN 20/5
PAVING MOD.
18/5

36/5 PLAN · C.B. IN PLAZA
1/2"=1'-0"

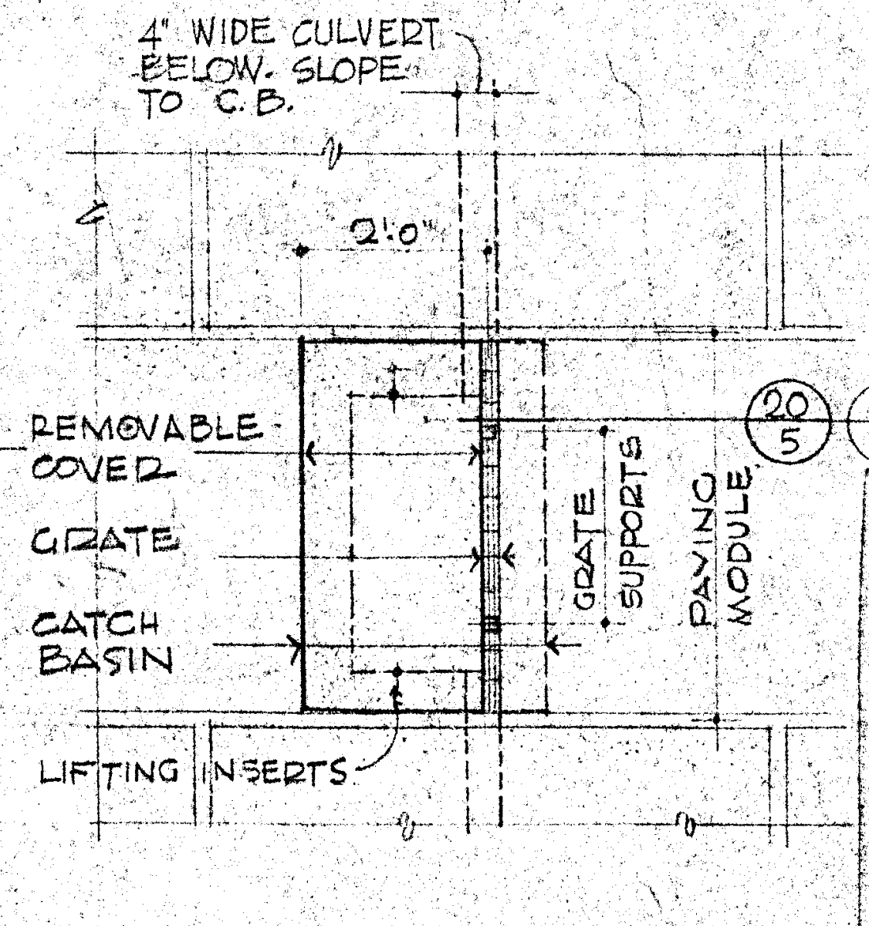
4" WIDE CULVERT BELOW. SLOPE TO C.B.
REMOVABLE COVER
GRATE
CATCH BASIN
LIFTING INSERTS
GRATE SUPPORTS
PAVING MODULE
20/5 39/5

37/5 PLAN · C.B. IN PLAZA
SEGMENTED DRAIN 1/2"=1'-0"

EMBARCADERO PLAZA

EMBARCADERO LOWER MARKET APPROVED REDEVELOPMENT PROJECT AREA E1

DETAILS

SAN FRANCISCO REDEVELOPMENT AGENCY IN COOPERATION
WITH THE SAN FRANCISCO RECREATION AND PARK DEPARTMENT
AND SAN FRANCISCO DEPARTMENT OF PUBLIC WORKS

JOINT VENTURE ARCHITECTS:
LAWRENCE HALPRIN & ASSOCIATES Lawrence Halprin
JOHN S. BOLLES ASSOCIATES
MARIO J. CIAMPI & ASSOCIATES Mario J. Ciampi

SCALE: AS NOTED
DATE: JAN. 25, 1969
DRAWN BY: W.H.

5

SHEET 5 OF 12

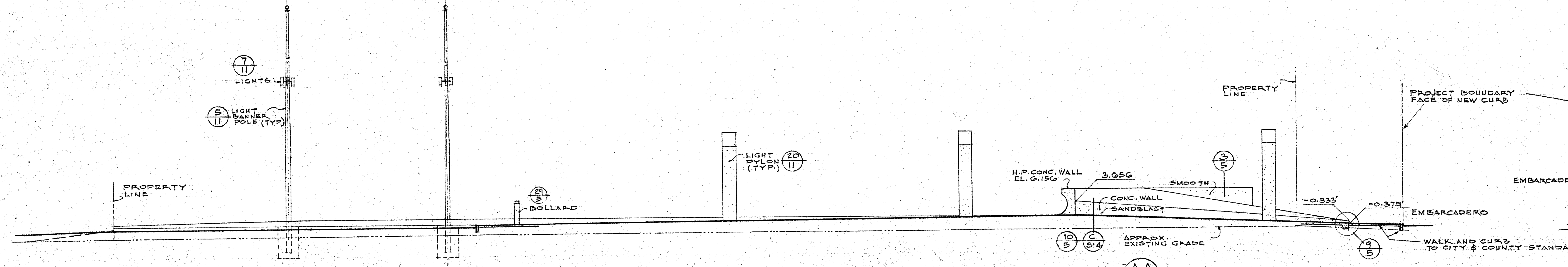
7/11 LIGHTS
5/11 LIGHT BANNER POLE (TYP)
PROPERTY LINE
29/5 BOLLARD
LIGHT PYLON (TYP) 20/11
H.P. CONC. WALL EL. 6.156
3.656
SMOOTH
3/5
CONC. WALL SANDBLAST
10/5 C/5-4
APPROX. EXISTING GRADE
PROPERTY LINE
PROJECT BOUNDARY FACE OF NEW CURB
-0.833'
-0.375'
EMBARCADERO
9/5
WALK AND CURB TO CITY & COUNTY STANDARDS

ELEVATION A-A/4 SCALE: 1" = 10'-0"

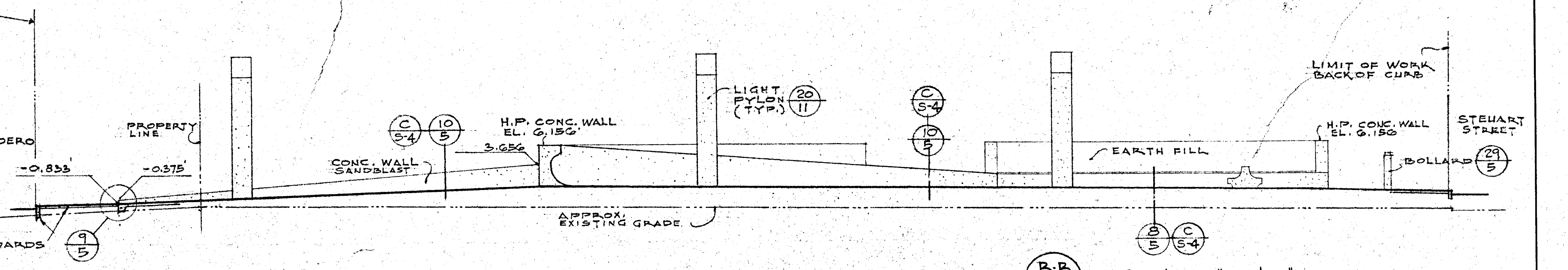
EMBARCADERO
-0.833'
-0.375'
PROPERTY LINE
9/5
C/5-4 10/5
H.P. CONC. WALL EL. 6.156'
3.656
CONC. WALL SANDBLAST
APPROX. EXISTING GRADE
LIGHT PYLON (TYP.) 20/11
C/5-4
10/5
EARTH FILL
8/5 C/5-4
LIMIT OF WORK BACK OF CURB
H.P. CONC. WALL EL. 6.156
STEUART STREET
BOLLARD 29/5

ELEVATION B-B/4 SCALE: 1" = 1'-0"

CLAY STREET
PROPERTY LINE
BACK OF CURB
CONC. PAVING
CONC. TEMPORARY STAIRS 2/5
A/5-4 2/5
SEA-WALL EL. 6.156
SCULPTURE AND FOUNTAIN SEE SHEETS 6,7,8,9,& 10
A/5-4 2/5
SEA-WALL EL. 6.156
SMOOTH FORM FIN. (TYP)
MASONRY PAVING ON CONC. SLAB
APPROX. EXISTING GRADE
-0.344'
CONC. STEPS
12/5
CONC. PAVING
1/5
MATCH-LINE "X"

PARTIAL ELEVATION C-C/4 SCALE: 1" = 10'-0"

MATCH-LINE "X"
SEA-WALL
A/5-4 1/5
A/5-4 1/5
SEA-WALL EL. 6.156
TRASH CONTAINER
PLEXIGLAS
CONC.
LIGHT PYLON (TYP) 20/11
SANDBLAST
8/5 C/5-4
CONC. WALL SANDBLAST
EARTH FILL
BENCH (TYP)
TOP CONC. EL. 2.156'
TRASH CONTAINER 17/11
EL. 6.156 H.P. WALL
10/5 C/5-4
L.P. WALL EL. 2.156
BENCH
CONC. PAVING
H.P. WALL EL. 6.156
C/5-4 10/5
CONC. WALL SANDBLAST
+2.156
+0.276
BENCH
PROPERTY LINE LIMIT OF WORK
LIGHTWEIGHT COMPACTED FILL
5/4 (TYP)
APPROX. EXISTING GRADE
B.A.R.T.D. EASEMENT, SEE PLAN SHEETS 2&3

PARTIAL ELEVATION C-C/4 SCALE: 1" = 10'-0"

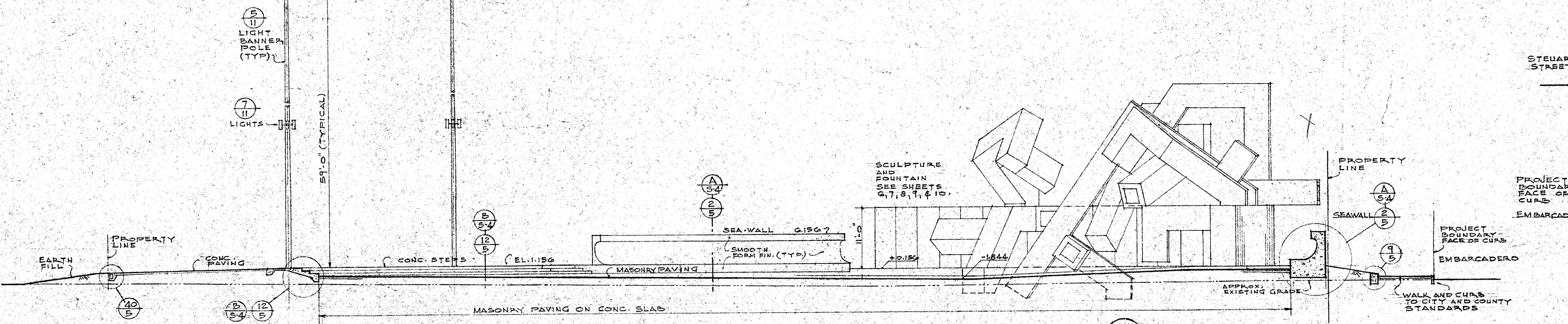
5/11 LIGHT BANNER POLE (TYP)
7/11 LIGHTS
59'-0" (TYPICAL)
EARTH FILL
PROPERTY LINE
CONC. PAVING
20/5
B/5-4 12/5
CONC. STEPS
EL. 1.156
MASONRY PAVING
A/5-4 2/5
B/5-4 12/5
SEA-WALL 6.156
SMOOTH FORM FIN. (TYP)
SCULPTURE AND FOUNTAIN SEE SHEETS 6,7,8,9,& 10
11'-0"
+0.156
-1.844
PROPERTY LINE
SEAWALL A/5-4 2/5
9/5
APPROX. EXISTING GRADE
PROJECT BOUNDARY FACE OF CURB
EMBARCADERO
WALK AND CURB TO CITY AND COUNTY STANDARDS
MASONRY PAVING ON CONC. SLAB

ELEVATION D-D/4 SCALE: 1" = 10'-0"

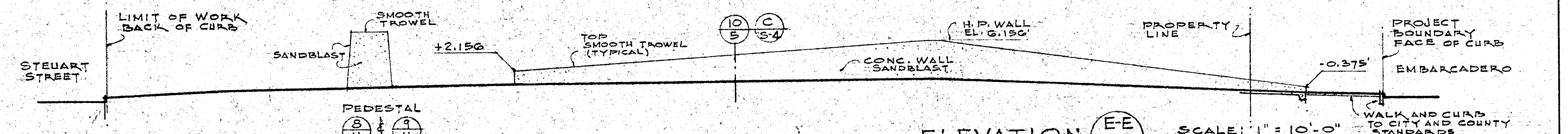
LIMIT OF WORK BACK OF CURB
STEUART STREET
SMOOTH TROWEL
SANDBLAST
+2.156
TOP SMOOTH TROWEL (TYPICAL)
PEDESTAL 8/11 & 9/11
10/5 C/5-4
H.P. WALL EL. 6.156'
CONC. WALL SANDBLAST
PROPERTY LINE
-0.375'
PROJECT BOUNDARY FACE OF CURB
EMBARCADERO
WALK AND CURB TO CITY AND COUNTY STANDARDS

ELEVATION E-E/4 SCALE: 1" = 10'-0"

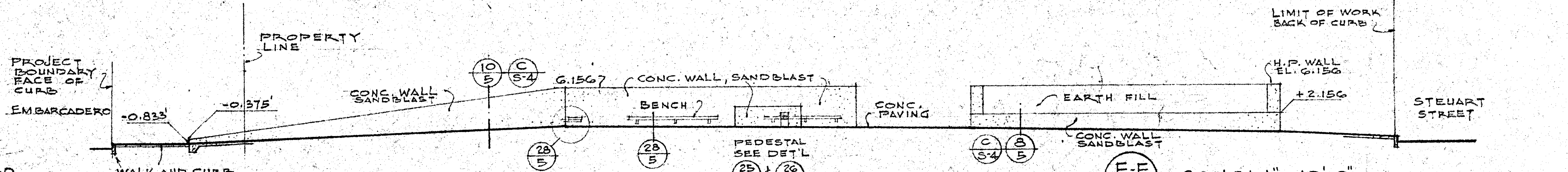
PROJECT BOUNDARY FACE OF CURB
EMBARCADERO
-0.833'
PROPERTY LINE
-0.375'
CONC. WALL SANDBLAST
10/5 C/5-4
6.156
CONC. WALL, SANDBLAST
BENCH
28/5
28/5
PEDESTAL SEE DET'L 25/5 & 26/5
CONC. PAVING
C/5-4 8/5
EARTH FILL
CONC. WALL SANDBLAST
LIMIT OF WORK BACK OF CURB
H.P. WALL EL. 6.156
+2.156
STEUART STREET
WALK AND CURB TO CITY AND COUNTY STANDARDS

ELEVATION F-F/4 SCALE: 1" = 10'-0"

EMBARCADERO PLAZA

EMBARCADERO LOWER MARKET APPROVED REDEVELOPMENT PROJECT AREA E1

ELEVATIONS

SAN FRANCISCO REDEVELOPMENT AGENCY IN COOPERATION
WITH THE SAN FRANCISCO RECREATION AND PARK DEPARTMENT
AND SAN FRANCISCO DEPARTMENT OF PUBLIC WORKS

JOINT VENTURE ARCHITECTS:
LAWRENCE HALPRIN & ASSOCIATES Lawrence Halprin
JOHN S. BOLLES ASSOCIATES
MARIO J. CIAMPI & ASSOCIATES

SCALE: 1" = 10'-0"
DATE: JAN. 25, 1969
DRAWN BY: W.H., H.N.

X 4

SHEET 4 OF 12

THE EMBARCADERO
CLAY STREET
COMMERCIAL STREET (CLOSED)
SACRAMENTO STREET (CLOSED)
MARKET STREET
STEUART STREET
FOUNTAIN POOL SEE SHT. # G & #7.
MASONRY PAVING
CONCRETE PAVING, TYPICAL
PLANTING AREA SEE SHT. L-1
S.F.B.A.R.T.D. EASEMENT
LIGHTWEIGHT COMPACTED FILL TO DEPTH OF 1.5' BELOW EXISTING GRADE IN EASEMENT AREA.
NEW PAVING TO MATCH EXISTING
NEW SIDEWALK & CURB TYPICAL
TREE PITS (TYPICAL)
REPAIR & REPLACE EXISTING PAVING AS REQUIRED, MATCH EXISTING (TYPICAL)
MATCH EXISTING CURBS & GUTTER ELEVATIONS
NEW C.B. CONNECT TO EXIS. CULVERT
NEW C.B. CONNECT TO EXISTING CULVERT
NEW C.B. CONNECT TO EXIS'G CULVERT
NEW C.B. CONNECT TO CULVERT
CONNECT TO EXISTING STORM SEWER
CONNECT TO POOL OVERFLOW
CONC. STAIRS
CONC. STEPS
CONC. APRON
PLUG ENDS
DRAIN RIBBON TRENCH
RIBBON TRENCH
SLOPE DOWN
SLOPE = 0.01
SLOPE TO EXISTING GRADE TYPICAL
RIDGE
SIDEWALK VENT & TRAP
ROUTE SEWER AS REQUIRED TO CROSS UNDER EXISTING UTILITIES
ROUTE SEWER AS REQUIRED TO CROSS EXISTING UTILITIES
CONNECT
21" VCP EXISTING
12" VCP
10" V.C.P.
EXISTING C.B. GRATE
C.B. GRATE -2.40 EXISTING
P.L.
SWB
80.00'
85.00'
131'
112'
200'
1.46
-1.92
1.38

NOTE:
FOR SIDEWALK VENT AND TRAP USE SMITH, FIG. 2110 - DDU-E, VANDAL-PROOF WITH DEFLECTOR GRATE & EXTENSION COLLAR, AND GALV. TOP. ALL WORK PER CITY & COUNTY OF S.F. STANDARDS.

NOTES:

1. FOR EXISTING GRADE ELEVATIONS, SEE SURVEY.
2. FOR PROJECT BOUNDARIES, SEE SHEET NO. 2.; AND NOTE 16, SH. 1.
3. FOR DIMENSIONS, INFORMATIONS, AND NOTES NOT INDICATED, SEE SHEETS NO. 1, AND NO. 2.
4. VERIFY EXACT LOCATION, NUMBER, AND TYPE OF CATCHBASIN RIMS WITH COVERS THAT ARE REQUIRED TO BE RAISED TO NEW ELEVATIONS WITH THE UTILITY COMPANIES AND/OR SERVICE DEPARTMENTS INVOLVED.
5. EXTENT AND QUANTITY OF SURCHARGE SHOWN ON SH. 1

EMBARCADERO PLAZA
EMBARCADERO LOWER MARKET APPROVED REDEVELOPMENT PROJECT AREA E1

GRADING & DRAINAGE PLAN

SAN FRANCISCO REDEVELOPMENT AGENCY IN COOPERATION
WITH THE SAN FRANCISCO RECREATION AND PARK DEPARTMENT
AND SAN FRANCISCO DEPARTMENT OF PUBLIC WORKS

JOINT VENTURE ARCHITECTS:
LAWRENCE HALPRIN & ASSOCIATES Lawrence Halprin
JOHN S. BOLLES ASSOCIATES
MARIO J. CIAMPI & ASSOCIATES

SCALE: 1" = 20'-0"
DATE: JAN. 25, 1969
DRAWN BY: W.H., H.N.

3

SHEET 3 OF 12

THE EMBARCADERO
CLAY STREET
COMMERCIAL STREET (CLOSED)
SACRAMENTO STREET (CLOSED)
MARKET STREET
STEUART STREET
FOUNTAIN-POOL SEE PLAN SHEETS "G"
MASONRY PAVING (TYPICAL) 1/2" EXP. JOINTS THRU BRICK AND CONCRETE SUB-SLAB. SUB-SLAB EXP. JT. TO CONFORM WITH BRICK PAVING PATTERN
MASONRY PAVING SEE SHEET 7 FOR PATTERN DETAIL
CONCRETE PAVING, TYPICAL
PLANTING AREA SEE SHT. L-1
B.A.R.T.D. EASEMENT
MASONRY PAVING
STATUE PEDESTAL
BENCH (TYP.)
SEAWALL
CONC. APRON
CONC. STEPS
DRAIN TRENCH
LIGHT PYLON, TYP
TREE PIT, TYP
BENCH TYPICAL
PEDESTAL
NEW CURB, GUTTER AND WALK
NEW PAVING TO MATCH EXISTING
EXISTING CURB DOTTED
NEW CURB AND SIDEWALK TO CITY AND COUNTY STANDARDS
PROJECT BOUNDARY (FACE OF NEW CURB)
NEW CURB AND SIDEWALK TREE PIT (TYP.)
PROJECT BOUNDARY (FACE OF NEW CURB)
PROPERTY LINE
PROJECT BOUNDARY
PROJECT BOUNDARY BACK OF CURB
NEW CURB, GUTTER AND STREET RECONSTRUCTION AND PAVING N.I.C.
NEW M.H.
NEW C.B.
OVERALL PROPERTY LINES WALLS AND STEPS
PLANTERS AND PAVING PATTERN WALLS AND STEPS PROPERTY LINES OVERALL
846.332'
745.728'
100.604'
217.75'
120.0'
314.445

NOTE:
FOR WORK INCLUDED BEYOND THE PROJECT BOUNDARY, SEE NOTE 16, SHEET 1.

SYMBOLS AND ABBREVATIONS

A.B.	ANCHOR BOLT	EL. ELEV.	ELEVATION	L.B.P.	LIGHT BANNER POLE	T.R.	TRASH RECEPTACLE	B 3	SECTION LETTER SHEET NUMBER SECTION SYMBOL
ALT.	ALTERNATE	E.M.H.	EXISTING MANHOLE COVER AND FRAME RAISED TO NEW LEVEL OF GRADE OR PAVING ELEV. & LINE EXTENDED	INV.	INVERT	V.C.P.	VITREOUS CLAY TILE	5 3	DETAIL NUMBER SHEET NUMBER DETAIL SYMBOL
C.B.	CATCH BASIN	⊗		N.I.C.	NOT IN CONTRACT	T/C	TOP OF CURB	6	MEASURING POINT
C.I.	CAST IRON	E.J. EXP. JT.	EXPANSION JOINT	P.L.	PROPERTY LINE	T/W	TOP OF WALL	NR NR	CENTER LINE OF SCULPTURE ELEMENT
C.J.	CONSTRUCTION JOINT	EQ.	EQUAL	S.	SLOPE	▪ SWB	STREET WASHER BOX	▨ ●	NEW CATCH BASIN
C.O.T.G.	CLEAN-OUT TO GRADE	GALV.	GALVANIZED	S.S.	STORM SEWER	⊕	NEW FRAME & COVER ON E.M.H. (RAISE TO GR.)	○	EXISTING MAN-HOLE
℄	CENTER-LINE	G.I.	GALVANIZED IRON	O.C.	ON CENTER	◒	NEW CATCHBASIN	←SS—	NEW STORM SEWER
EA.	EACH	L.	LIGHT PYLON	T.P.	TREE POCKET TREE PIT			—SS—	EXISTING STORM SEWER

EMBARCADERO PLAZA

EMBARCADERO LOWER MARKET APPROVED REDEVELOPMENT PROJECT AREA E1

LAYOUT PLAN

SAN FRANCISCO REDEVELOPMENT AGENCY IN COOPERATION
WITH THE SAN FRANCISCO RECREATION AND PARK DEPARTMENT
AND SAN FRANCISCO DEPARTMENT OF PUBLIC WORKS

JOINT VENTURE ARCHITECTS:
LAWRENCE HALPRIN & ASSOCIATES Lawrence Halprin
JOHN S. BOLLES ASSOCIATES
MARIO J. CIAMPI & ASSOCIATES Mario J. Ciampi

SCALE: 1" = 20'-0"
DATE: JAN. 25, 1969
DRAWN BY: W.H. H.N.

2

SHEET 2 OF 12

THE EMBARCADERO
CLAY STREET
COMMERCIAL STREET
SACRAMENTO STREET
MARKET STREET
STEUART STREET
NEW PLANTING AREA
NEW MASONRY PAVING
NEW CONC. PAVING
NEW FOUNTAIN AND SCULPTURE SEE SHEETS 2,3,6, AND 7.
SURCHARGE AREA: 13,850 SQ. FT. APPROXIMATELY 6,000 CU YDS TOP OF FILL + 13'-0"
OUTLINE OF NEW CONSTRUCTION SEE SH. 2 & 3.
NEW SEA WALL SEE SH. 2 TYPICAL
EXISTING SEWER LINE TO BE REMOVED.
ABANDON EXISTING CATCHBASINS & CULVERTS
UNDERGROUND UTILITIES & SERVICES TO REMAIN SEE NOTE 6
2 Story Brick Bldg. Bsm't. Floor El. = -9.01 SEE NOTES: 1,2,3
2 Story Conc. Bldg. Bsm't. Floor El. = -10.01 SEE NOTES: 1,2,3
Existing Pavement SEE NOTES: 4,5
NEW CONC. WALLS (TYP.) SEE SH. 2
Broken Conc. Slab Elev. = -10.01
TREE POCKET LOCATIONS (TYP.)
NEW TREE PIT (TYP.)
ABANDON EXIST'G C.B. & CULVERT
N. 44°51'51" W. 745.728'
S. 44°51'51" E. 420.330'
S. 44°51'51" E. 314.445'
S. 9°05'21" E. 137.500'
N. 45°08'09" E. 137.500'
N. 45°08'09" E. 82.500'
S. 60°54'39" W. 172.087'
LIMIT OF WORK
10" VCP CONNECT TO EXIST'G CULVERT
EXISTING 18" C.I.
N. 4,800
N. 4,600
E. 6,000
E. 6,200
Ⓔ MARKET STREET
Ⓔ STEUART STREET

NOTE: PORTIONS OF MARKET AND STEUART STREETS WITHIN PROJECT LIMITS AND NEW CURB & GUTTER FOR SAME TO BE REBUILT BY OTHERS.
SEE PLAN A-32484 REDEVELOPMENT AREA E-1, STREETS CONTRACT "F".
STEUART STREET VICINITY "FOR DRAINAGE WORK" ON STEUART STREET.

DEMOLITION PLAN
SCALE: 1" = 20'-0"

NOTES

1. BUILDING REMOVED BY OTHERS. N.I.C.
2. BASEMENT BACKFILLED BY OTHERS. CONFIRM EXTENT AND/OR OMISSIONS AT THE SITE.
3. ALL EXISTING FOOTINGS SHALL BE REMOVED TO A DEPTH OF 30" MIN. BELOW NEW FOOTINGS, AS SPECIFIED.
4. ALL EXISTING PAVING, SLABS, CURBS, AND WALKS ON THE SITE SHALL BE REMOVED, AS SPECIFIED.
5. ALL UTILITIES AND SERVICES BETWEEN ARROWS ARE TO BE ABANDONED, EXCEPT AS OTHERWISE INDICATED. CONFIRM WITH PROPER UTILITY OR COMPANY THAT EACH LINE IS INACTIVE BEFORE CUTTING OR BLOCKING. PLUG AND/OR FILL ALL ABANDONED MANHOLES, ELEVATOR ENTRIES, ETC.
6. ADJUST MANHOLE RIM OR C.B. GRATE TO NEW PAVEMENT OR GRADE ELEVATION, OR AS OTHERWISE INDICATED.
7. RELOCATE OR ADJUST MANHOLE OR C.B. AS INDICATED OR AS REQUIRED BY NEW CURB OR OTHER CONSTRUCTION.
8. PLUG AND FILL (MANHOLE, CATCH BASIN, ETC.) BUT LINE(S) SERVING SAME IS TO REMAIN IN SERVICE.
9. INFORMATION TAKEN FROM "BOUNDARY & TOPOGRAPHIC SURVEY" OF PROPOSED FERRY BLDG. PARK FOR SAN FRANCISCO REDEVELOPMENT AGENCY, DATED MAY, 1966 BY KIRKER, CHAPMAN, & ASSOCIATES, CONSULTING CIVIL ENGINEERS.
10. FOR NEW GRADE ELEVATIONS, SEE SHEET 3.
11. BASIS OF ELEVATIONS - CITY OF SAN FRANCISCO DATUM.
12. VERIFY ALL CONDITIONS & DIMENSIONS AT THE SITE.
13. FOR PROJECT BOUNDARIES, SEE SH. 2.
14. THE ABANDONMENT OF EXISTING DRAINAGE FACILITIES SHOWN TO BE ABANDONED SHALL BE DONE IN ACCORDANCE WITH THE APPLICABLE REQUIREMENTS OF SECTION 303 OF THE SAN FRANCISCO BUREAU OF ENGINEERING STANDARD SPECIFICATIONS, 1965.
15. ABANDONMENT OF THE SANITARY SEWER IN SACRAMENTO STREET BASED ON PREMISE THAT NO SANITARY FACILITIES ARE REQUIRED FOR THE EMBARCADERO PLAZA IN THIS AREA.
16. IN ADDITION TO THE WORK WITHIN TO PROJECT BOUNDARY, THE FOLLOWING WORK OUTSIDE THE PROJECT BOUNDARY SHALL BE INCLUDED IN THE PROJECT SCOPE (ALT. A), SHOWN ON THIS SHEET:
    1. NEW CATCHBASINS, & ABANDONING OF CULVERTS
    2. NEW VCP CONNECTIONS
    3. NEW PAVING & REMOVAL OF CURB

LEGEND

●	STOP LIGHT
△	STREET SIGN
△	PARKING SIGN
▲	PARKING METER
△	WAIT WALK SIGN
□	TRAFFIC CONTROL BOX
☒	FIRE ALARM BOX
□	TROLLEY POLE
◎	ELECTROLIER
▣	TROLLEY POLE & ELECTROLIER
◎	POWER POLE & ELECTROLIER
◎	ELECTROLIER W/ OCTAGON BASE
▭	POLICE TELEPHONE
●	FUEL INLET
○	GAS VALVE
⊗	WATER VALVE
▬	WATER METER
♉	LOW PRESSURE FIRE HYDRANT
♉	HIGH PRESSURE FIRE HYDRANT
⊞	SEWER VENT
P.L.	PROPERTY LINE
⊡	SET HUB
⊙	SET LEAD PLUG W/TAG MARKED R.C.E. 12081
+	SET CUT
⁘	SET FIVE NAILS
▨	CONCRETE
▭	APPROX. LIMITS OF BASEMENTS
———	LIMITS OF BASE BID, EXCEPT AS NOTED OTHERWISE. SEE SPECIFICATIONS.
— — —	APPROX. LIMITS ALTERNATE "A". SEE SPEC.
- - - -	LIMIT AREA AVAIL. TO SLOPE FILL FROM NEW GRADE TO EXISTING.
0.00	EXISTING GRADE ELEVATIONS
0.0	NEW GRADE ELEVATIONS
⊕	INSTALL NEW FRAME AND COVER ON EXISTING MANHOLE (PLAN A-10,634)
◓	NEW CATCHBASIN (PLAN LL-18,039 CH.6)
AB	ABANDON EXISTING SEWERS & RELATED FACILITIES BY FILLING WITH SLURRY

EMBARCADERO PLAZA
EMBARCADERO LOWER MARKET APPROVED REDEVELOPMENT PROJECT AREA E1

DEMOLITION PLAN

SAN FRANCISCO REDEVELOPMENT AGENCY IN COOPERATION
WITH THE SAN FRANCISCO RECREATION AND PARK DEPARTMENT
AND SAN FRANCISCO DEPARTMENT OF PUBLIC WORKS

JOINT VENTURE ARCHITECTS: Lawrence Halprin
LAWRENCE HALPRIN & ASSOCIATES
JOHN S. BOLLES ASSOCIATES
MARIO J. CIAMPI & ASSOCIATES Mario J. Ciampi

SCALE: 1" = 20'-0"
DATE: JAN. 25, 1969
DRAWN BY: D.P. W.H.

1

SHEET 1 OF 12

11-18-63